# UNIFIED ZONING REGULATIONS

**City of Billings**
**and**
**Yellowstone County**
**Jurisdictional Area**

**CITY OF BILLINGS AND YELLOWSTONE COUNTY JURISDICTIONAL AREA**

**UNIFIED ZONING REGULATIONS**

**ADOPTING ORDINANCE # 97-5048**

For the purpose of Zoning Code distribution, this ordinance document has been reduced to reflect title only, along with approval and effective date of ordinance. To receive a copy of the entire original ordinance please contacts the City of Billings City Clerk's office.

This Unified Zoning Code document includes the Sections adopted in City of Billings Ordinance No. 97-5048 and Yellowstone County Resolution No. 98-6 and all of the amendments approved by the City of Billings City Council and the Board of County Commissioners, Yellowstone County, Montana as of March 23, 2005.

ORDINANCE NO. 97-5048

AN ORDINANCE OF THE CITY OF BILLINGS, PROVIDING FOR THE REPEAL OF CHAPTER 27, SECTIONS 27-101 THROUGH 27-422 AND SECTIONS 27-601 THROUGH 27-604 AND SECTIONS 27-801 THROUGH 27-1311 OF THE CODE OF ORDINANCES, CITY OF BILLINGS, AND DECLARING SAME TO BE NULL AND VOID AND OF NO EFFECT AND REPLACING THOSE REPEALED SECTIONS.

BE IT ORDAINED BY THE CITY COUNCIL OF THE CITY OF BILLINGS, MONTANA:

Section 1. That Article 27-100, Sections 27-101, 27-102 and 27-103 of the Billings Montana City Code is hereby repealed and replaced as follows:

**Sec. 27-101. Title.**

This Resolution/Ordinance and maps shall be known and cited as The City of Billings and Yellowstone County Zoning Regulations for the areas incorporated into the City of Billings, Montana and the unincorporated Yellowstone County, Montana 4½ Mile Jurisdictional Area.

**Sec. 27-102. Purpose.**

The zoning regulations, classifications, and the districts as herein set forth are in accordance with MCA 76-2-101, MCA 76-2-201, et seq. (County Zoning) and MCA 76-2-301, et seq. (Municipal Zoning).

These regulations have been established in accordance with the 1990 Yellowstone County Comprehensive Plan and have been deemed necessary and developed with consideration, among other things, to the character of each zoning district and its peculiar suitability for particular uses, to conserve the value of buildings, to stabilize property values, to preserve recreation and agriculture lands from conflict with urban development, to promote the interest of health, safety and general welfare, to secure safety from fire and to provide adequate open space for light and air, and to facilitate the economic provision of adequate transportation, water, sewers, schools, parks and other public requirements. To achieve the above stated goals, these regulations shall govern the height and size of buildings and structures, the percentage of lots that may be occupied, the size of yards and open space, the density of population and the location and use of buildings, structures and land for trade, industry, residence or other purposes within the Billings city limits and the unincorporated Yellowstone County 4½ Mile Jurisdictional Area.

Planned Development - Preliminary Review and Zone Change . . . . . $600.00

Section 16. EFFECTIVE DATE. This ordinance shall be effective February 1, 1998.

Section 17. REPEALER. All resolutions, ordinances, and sections of the City Code inconsistent herewith are hereby repealed.

Section 18. SEVERABILITY. If any provision of this ordinance or the application thereof to any person or circumstances is held invalid, such invalidity shall not affect the other provisions of this ordinance which may be given effect without the invalid provisions or application, and, to this end, the provisions of this ordinance are declared to be severable.

PASSED by the City Council on first reading this 8th day of December, 1997.

PASSED, ADOPTED and APPROVED on second reading this 22nd day of December, 1997.

CITY OF BILLINGS

By Charles F. Tooley
Mayor

ATTEST:

By Marita Herold
City Clerk

**CITY OF BILLINGS AND YELLOWSTONE COUNTY JURISDICTIONAL AREA**

**UNIFIED ZONING REGULATIONS**

**TABLE OF CONTENTS**


ART. 27-100. TITLE, PURPOSE AND SCOPE ..... 1

ART. 27-200. DEFINITIONS ..... 3

ART. 27-300. ZONING DISTRICTS AND OFFICIAL MAP ..... 17

ART. 27-400. NONCONFORMING LOTS AND USES OF LAND
NONCONFORMING STRUCTURES AND USES OF STRUCTURES ..... 56

ART. 27-500. HISTORIC PRESERVATION ..... 60

ART. 27-600. SUPPLEMENTARY GENERAL PROVISIONS ..... 74

ART. 27-700. SIGNS ..... 143

ART. 27-800. SOUTH 27TH STREET CORRIDOR ZONING DISTRICT ..... 195

ART. 27-900. MEDICAL CORRIDOR PERMIT ZONING DISTRICT ..... 202

ART. 27-1000. INTERCHANGE/ENTRYWAY ZONING DISTRICTS ..... 249

ART. 27-1100. LANDSCAPING ..... 273

ART. 27-1200. OFF-STREET PARKING AND LOADING STANDARDS (COUNTY ONLY) ..... 284

ART. 27-1300. PLANNED DEVELOPMENTS ..... 292

ART. 27-1400. SHILOH CORRIDOR OVERLAY DISTRICT ..... 298

ART. 27-1500. CITY AND COUNTY ZONING COMMISSIONS AND
CITY AND COUNTY BOARDS OF ADJUSTMENT ..... 354

ART. 27-1600. ADMINISTRATION AND ENFORCEMENT ..... 378

ART. 27-1700. SEPARABILITY CLAUSE, REPEAL OF CONFLICTING
RESOLUTIONS/ORDINANCES AND EFFECTIVE DATE ..... 380

ATTACHMENTS: **(NOT PART OF THE UNIFIED CODE, COUNTY ONLY)**

A: YELLOWSTONE COUNTY SIGN CODE

B: SPECIAL ZONING DISTRICTS

## ARTICLE 27-100. TITLE, PURPOSE AND SCOPE

### SEC. 27-101. TITLE.

This Resolution/Ordinance [chapter] and maps shall be known and cited as The City of Billings and Yellowstone County Zoning Regulations for the areas incorporated into the City of Billings, Montana and the unincorporated Yellowstone County, Montana 4½ Mile Jurisdictional Area.

### SEC. 27-102. PURPOSE.

The zoning regulations, classifications, and the districts as herein set forth are in accordance with MCA 76-2-101, MCA 76-2-201, et seq. (County Zoning) and MCA 76-2-301, et seq. (Municipal Zoning).

These regulations have been established in accordance with the 1990 Yellowstone County Comprehensive Plan and have been deemed necessary and developed with consideration, among other things, to the character of each zoning district and its peculiar suitability for particular uses, to conserve the value of buildings, to stabilize property values, to preserve recreation and agriculture lands from conflict with urban development, to promote the interest of health, safety and general welfare, to secure safety from fire and to provide adequate open space for light and air, and to facilitate the economic provision of adequate transportation, water, sewers, schools, parks and other public requirements. To achieve the above stated goals, these regulations shall govern the height and size of buildings and structures, the percentage of lots that may be occupied, the size of yards and open space, the density of population and the location and use of buildings, structures and land for trade, industry, residence or other purposes within the Billings city limits and the unincorporated Yellowstone County 4½ Mile Jurisdictional Area.

The City Council of the City of Billings and Board of County Commissioners of Yellowstone County further declares these Zoning Regulations are adopted for the following specific purposes:

(a) To promote and guide development consistent with the goals and objectives of the 1990 Yellowstone County Comprehensive Plan;

(b) To prevent waste and inefficiency in land use;

(c) To encourage innovations in residential development and renewal so that the needs of the community for housing may be met by greater variety in type and design of dwellings and by conservation of open space; and

(d) To provide adequate land and space for the development of commercial and industrial uses and to encourage such developments in locations calculated to benefit the community at large and in a manner consistent with the goals and objectives of the 1990 Yellowstone County Comprehensive Plan.

## ARTICLE 27-100. TITLE, PURPOSE AND SCOPE

### SEC. 27-103. SCOPE.

(a) This chapter applies to all lands within the City of Billings and the unincorporated portions of the Yellowstone County 4½ Mile Jurisdictional Area.

(b) In their interpretation and application, the provisions of this chapter may be regarded as the minimum requirements for the protection of the public health, safety, comfort, prosperity and welfare.

(c) This resolution/ordinance is not intended to abrogate or annul any building permit, certificate of occupancy, variance or other lawful permit issued before the effective date of this Resolution/Ordinance.

***Editor's note:** Ord. No. 97-5048, § 1, adopted Aug. 22, 1997, amended former Art. 27-100, §§ 27-101--27-103, in its entirety and which pertained to similar subject matter. See the Code Comparative Table for a listing of ordinances from which former §§ 27-100--27-103 derived.

## ARTICLE 27-200. DEFINITIONS

### SEC. 27-201. DEFINITIONS.

For the purpose of this Resolution/Ordinance, certain terms or words used herein are defined as follows:

The word PERSON includes a firm, association, organization, partnership, trust, company or corporation, as well as, an individual; the present tense includes the future tense, the singular number includes the plural, and the plural number includes the singular; the word SHALL is mandatory, the word MAY is permissive; the words USED or OCCUPIED include the words INTENDED, DESIGNATED, OR ARRANGED TO BE USED OR OCCUPIED; and the word LOT includes the words PLOT, TRACT OR PARCEL. Where other definitions are necessary and are not defined herein, the dictionary may define such terms.

**ACCESSORY**: A use, building or structure, part of a building or other structure, which is subordinate to, and the use of which is incidental to that of the main building, structure or use on the same lot, including a private garage.

(1) **ATTACHED ACCESSORY STRUCTURE**: Any structure or building which has any roof or wall in common with the principal structure. For purposes of zoning, an attached accessory structure is considered part of the principal structure.

(2) **DETACHED ACCESSORY STRUCTURE**: Any structure or building which does not have any roof or wall in common with any principal structure or building. For purposes of zoning, a detached accessory structure must maintain a minimum distance of six (6) feet from any other building or structure.

**ADULT FOSTER FAMILY CARE HOME**: *See* COMMUNITY RESIDENTIAL FACILITIES.

**AGRICULTURE**: The use of land for agricultural purposes, including farming, dairying, pasturage agriculture, grazing land, animal and poultry husbandry, horticulture, floriculture, viticulture, including all uses customarily incidental thereto but not including any agriculture industry or business such as commercial feed lots, animal hospitals, food processing plants, fur farms or similar uses.

**AIRPORT OR AIRCRAFT LANDING FIELD**: Any runway, landing area or facility whether publicly or privately owned and operated, and which is designed, used or intended to be used either by public carriers or by private aircraft for landing and taking off of aircraft, including all necessary taxiways, aircraft storage and tie-down areas, hangars and other necessary buildings and open spaces.

**ALTERATIONS**: A change or rearrangement of the structural parts of existing facilities, or an enlargement by extending the sides or increasing the height or depth or the moving from one (1) location to another. In buildings for business, commercial, industrial or similar uses, the installation or rearrangement of partitions affecting more than one third of a single floor area shall be considered an alteration.

**ANTENNA**: See BMCC Section 27-610

**APARTMENT HOUSE**: *See* DWELLING, MULTIPLE-FAMILY.

## ARTICLE 27-200. DEFINITIONS

**AUTOMOBILE OR VEHICLE SALVAGE OR WRECKING YARD**: The dismantling or wrecking of motor vehicles or trailers, or the storage, sale or dumping of dismantled, or partially dismantled, obsolete, or wrecked vehicles or their parts or any establishment or place of business which is maintained or used for the storage, keeping, buying or selling of wrecked, scrapped or dismantled motor vehicles or motor parts. The presence on any lot or parcel of land of two or more motor vehicles, which, for a period exceeding thirty (30) days, have not been capable of operating under their own power and from which parts have been removed for reuse or sale, shall constitute a salvage or wrecking yard.

**AUTOMOBILE SALES AREA**: *See* **VEHICLE SALES AREA**.

**BARS, TAVERNS AND COCKTAIL LOUNGES**: An establishment where alcoholic beverages are sold and consumed on the premises.

**BED & BREAKFAST INN**: A house, or a portion thereof, that contains short-term guest rooms where lodging, with or without meals, is provided for compensation. The operator of the inn shall live on the same property upon which the inn is located.

**BOARD**: The Board of Adjustment of the City of Billings or the Board of Adjustment of Yellowstone County.

**BOARDING OR LODGING HOUSE**: "Boarding house" means the same as lodging house, but where meals (with or without lodging) are provided for compensation and by prearrangement for a definite period for three (3) or more persons. Boarding houses shall not be construed to mean rest homes or convalescent homes. This definition shall also exclude "Bed & Breakfast Inns".

**BOAT SALES AREA**: *See* **VEHICLE SALES AREA**.

**BUILDING**: Any structure having a roof, but excluding all forms of vehicles even though immobilized. When a use is required to be within a building, or where special authority granted pursuant to this chapter requires that a use shall be within an entirely enclosed building then the term "building" means one so designed and constructed from the ground to the roof line, and shall contain no openings except for windows and doors which are designed so that they may be closed.

**BUILDING HEIGHT**: The vertical distance from the highest point of a structure to the "grade", excluding permissible height exceptions in BMCC Sections 27-308 and 27-309.

**BUILDING, PRINCIPAL**: The primary building or use on a lot that accommodates the principal use to which the premises are devoted.

**CAMP, PUBLIC & PRIVATE**: Any area or tract of land used or designed to accommodate two (2) or more camping parties, including cabins, tents, travel trailers and other camping outfits.

**CARPORT**: A structure to house or to protect motor vehicles owned or operated by the occupants of the main building which is open on three (3) or fewer sides.

**CAR WASH**: A building or area that provides facilities for washing and cleaning motor vehicles, excluding semi-tractors and/or semi-trailers, which may use production line methods with a conveyor, blower or other mechanical devices. This term also includes facilities which require hand labor in the cleaning of the vehicle.

**CHILD CARE FACILITIES**:

(1) **FAMILY DAY CARE HOME**: A private residence in which supplemental parental care is provided for up to six (6) children, including the operator's children, from separate families on a regular basis. Such day care home shall be licensed by the Montana Department of Social and Rehabilitation Services under M.C.A., Title 53, Chapter 4, Part 5, as required by state law.

(2) **GROUP DAY CARE HOME**: A private residence in which supplemental parental care is provided for seven (7) to twelve (12) children, including the operator's children, on a regular basis and which is licensed by the Montana Department of Social and Rehabilitation Services under M.C.A., Title 53, Chapter 4, Part 5, as required by state law.

(3) **DAY CARE CENTER**: A place in which supplemental parental care and/or adult supervision is provided to thirteen (13) or more children, including the operator's children, on a regular basis, and which may include nursery schools, private kindergartens or after school care and supervision. Such day care center shall be licensed as required by the state, city or county and conducted in accordance with applicable state and local requirements.

**CHURCH OR OTHER PLACE OF WORSHIP**: A building which is used primarily for religious worship and related religious activities, including but not limited to churches, convents, monasteries, shrines and temples.

**CLINIC, MEDICAL**: A building designed and used for the medical, dental and surgical diagnosis and treatment of patients under the care of doctors and nurses, but where no surgery other than minor emergency care is performed and where no overnight care is provided.

**CLINIC, SURGICAL**: A clinic where surgery is performed on an outpatient basis only.

**CLUB, FRATERNAL**: A group of people formally organized for a common interest, usually cultural, religious or entertainment, with regular meetings, rituals and formal membership requirements. This definition includes such organizations as the Knights of Columbus, Masons, Elks and other similar organizations.

**CLUB, SERVICE**: Any nonprofit organization, the services of which are devoted entirely to the betterment or improvement of community in which it is located, including organizations such as the Lions, Kiwanis, Rotary, Optimists and other similar organizations.

**COMMUNITY GROUP HOME**: *See* **COMMUNITY RESIDENTIAL FACILITIES**.

**COMMUNITY RESIDENTIAL FACILITIES**:

(1) **ADULT FOSTER FAMILY CARE HOME**: A private home licensed by the Montana Department of Family Services owned by one (1) or more persons eighteen (18) years of age or older which offers light personal care or custodial care to disabled adults who are not related to the owner by blood or marriage or which offers light personal care or custodial care to aged persons. The number of

aged persons or disabled adults in an adult foster family care home may total no more than four (4).

(2) **COMMUNITY GROUP HOME**: A family oriented residence or home licensed by the appropriate state agency designed to provide residential services and facilities for developmentally, severely disabled or mentally disabled persons, but does not provide skilled or intermediate nursing care.

(3) **HALFWAY HOUSE**: A place operated in accordance with the regulations of the Montana Department of Health and Environmental Sciences for the rehabilitation of alcohol or drug dependent persons.

(4) **YOUTH FOSTER HOME**: A youth care facility licensed by the Montana Department of Family Services in which substitute care is provided to one (1) to six (6) foster children or youths, other than the foster parents' own children, stepchildren or wards.

(5) **YOUTH GROUP HOME**: A youth care facility licensed by the Montana Department of Family Services in which substitute care is provided to seven (7) to twelve (12) children or youth.

**CONDOMINIUM**: Ownership in common with others of a parcel of land and certain parts of a building, together with individual ownership in fee of a particular unit in such building or of an individual detached unit.

**CONVENIENCE STORE**: A retail store that is designed and stocked to sell primarily food, beverages and other household supplies to customers who purchase only a relatively few items (in contrast to a "supermarket"). It is designed to attract, and depends upon, a large volume of stop-and-go traffic. Illustrative examples of convenience stores are those operated by the "7-11" and "Kwik-Way" chains. These stores may also include pumps and/or storage tanks from which fuels are dispensed at retail. No servicing, maintenance or repair work shall be conducted on the business premises. This definition shall exclude truck stops.

**DAY CARE CENTER**: *See* **CHILD CARE FACILITIES**.

**DRIVE-IN SERVICE**: A use whose character is dependent on a driveway approach, a drive-through and/or parking space for motor vehicles so as to either serve customers while in the vehicle or permit consumption of food or beverages in a vehicle obtained on the premises. Drive-in or drive-up window restaurants, drive-in banking, pickup windows for beverages or food, and other drive-in or drive-through services are included in this category. This definition shall exclude car washes and insurance adjusters.

**DUPLEX**: *See* **DWELLING, TWO-FAMILY**.

**DWELLING**: A building designed exclusively for residential purposes, including single-family, two-family, and multiple-family dwellings, but not including hotels or motel units, bed and breakfast guest rooms, boarding or lodging houses, or travel trailers and/or vehicles.

**DWELLING, TYPES OF**:

(1) **DWELLING, SINGLE-FAMILY**: A building constructed and designed for occupancy by one (1) family and containing one (1) dwelling unit.

(2) **DWELLING, TWO-FAMILY (DUPLEX)**: A building constructed and designed for occupancy by two (2) families living independently of each other, and containing two (2) dwelling units, where the dwelling units share a common separation such as a ceiling, wall, etc. (including, without limitation, the wall of an attached garage or porch) and where access cannot be gained between the units through an internal doorway.

(3) **DWELLING, MULTIPLE-FAMILY**: A building constructed and designed for occupancy by three (3) or more families living independently of each other, and containing three (3) or more dwelling units, where the dwelling units share a common separation such as a ceiling, wall, etc. (including, without limitation, the wall of an attached garage or porch) and where access cannot be gained between the units through an internal doorway, excluding common hallways.

**DWELLING UNIT**: One (1) or more rooms designed for or occupied by one (1) family for living or sleeping purposes and may contain kitchen and/or bathroom facilities for use solely by one (1) family. All rooms comprising a dwelling unit shall have access through an interior door to other parts of the dwelling unit. A studio/efficiency apartment constitutes a dwelling unit within the meaning of this chapter.

**FAMILY**: Any number of individuals, related by blood, marriage, adoption or other legal means, including any number of minor children in foster care, and/or any number of unrelated persons (including any domestic servants or caregivers) living together in a dwelling unit. The total number of persons living together in the dwelling unit cannot exceed the recommended guidelines, as amended time to time by HUD, of two (2) persons per bedroom (24 CFR Part 4, Section 982.401). A "family" is distinguished from a group occupying a boarding house, lodging house, bed and breakfast inn, fraternity/sorority house, hotel or clubhouse. (ORDINANCE 04-5292)

**FAMILY DAY CARE HOME**: *See* **CHILD CARE FACILITIES**.

**FENCE**: A barrier composed of posts connected by boards, rails, panels or wire for the purpose of enclosing space to separate parcels of land. This term also includes a masonry wall.

**FIREWORKS**: Those substances and/or articles which are more specifically defined in M.C.A. 50-37-101 through 50-37-103.

**FIREWORKS STAND**: A structure from which fireworks are sold, displayed or offered for sale. A fireworks stand is specifically limited to an approved temporary structure, as regulated in BMCC Section 27-614.

**FIREWORKS STORAGE BUILDING**: A structure used for the storage of fireworks.

**FLOODPLAIN OR FLOODWAY**: In all cases of interpretation, designated floodplain or floodway definitions as established by the Montana Department of Natural Resources and Conservation shall apply.

**FRATERNITY/SORORITY HOUSE**: A dwelling or dwelling unit occupied by and maintained exclusively for fraternity or sorority members, their guests or visitors and affiliated with and acknowledged as a fraternity/sorority house by an academic or professional college or university or other recognized institution of higher learning.

**GAMBLING ESTABLISHMENT**: See BMCC Section 27-612.

**GARAGE, RESIDENTIAL**: An accessory building or an accessory portion of the main building, enclosed on more than three (3) sides and designed or primarily used only for the shelter or storage of vehicles owned and operated by the occupants of the buildings.

**GRADE (ADJACENT GROUND ELEVATION)**: The lowest point of elevation of the finished surface of the ground, or the lowest point of elevation of the finished surface of the ground between the exterior wall of the building and the property line, if it is less than five (5) feet distance from the wall. In cases where walls are parallel to and within five (5) feet of a public sidewalk, alley or other public way, the grade shall be the elevation of the sidewalk, alley, or public way.

**GROSS FLOOR AREA**: The total area of a building measured by taking the outside dimensions of the building at each floor level intended for occupancy or storage.

**GROUP DAY CARE HOME**: *See* **CHILD CARE FACILITIES**.

**HALFWAY HOUSE**: *See* **COMMUNITY RESIDENTIAL FACILITIES**.

**HAZARDOUS WASTE FACILITIES**: See BMCC Sections 27-605, et seq.

**HEIGHT**: The vertical distance from the highest point of a structure to the "grade", excluding permissible height exceptions in BMCC Section 27-310.

**HELIPORT**: Any facility whose primary purpose is for the landing or taking off of helicopters. This would include any accessory uses or structures related to the principal use as a heliport, such as maintenance and overhaul, fueling, service, storage, tie-down areas and hangars.

**HOME OCCUPATION**: See BMCC Section 27-606.

**HOSPITAL, ANIMAL**: A building or premises including veterinary hospitals for the medical or surgical treatment of animals or pets, including dogs and cats, also including the boarding of hospitalized animals subject to medical or surgical treatment.

**HOSPITAL, GENERAL**: An institution specializing in giving clinical, temporary and emergency services of a medical or surgical nature to human patients and licensed by state law to provide facilities and services in surgery, obstetrics and general medical practice, as distinguished from treatment of mental and nervous disorders and alcoholism, but not excluding surgical and post-surgical treatment of mental cases. Nursing homes and convalescent homes are excluded from this definition.

**HOSPITAL, MENTAL**: An institution licensed by state agencies under the provisions of law to offer facilities, care and treatment for cases of mental and nervous disorders.

**HOTEL**: A building, or portion thereof, designed or used for temporary lodging, being less than thirty (30) days, where lodging with or without meals is provided for compensation. A central dining room, banquet meeting hall, kitchen, plus accessory shops and services catering to the general public can be provided.

**JUNKYARD**: An open area where wastes, or used or secondhand materials are bought, sold, exchanged, stored, processed or handled, which are not intended to be recycled. Materials shall include, but are not limited to, scrap iron and other metals, paper, rags, rubber tires and bottles.

**KENNEL, COMMERCIAL**: Any lot, building, structure or premises where more than two (2) dogs or cats over the age of six (6) months, other than those owned by the kennel owner are kept or maintained for boarding, training, breeding or selling, exclusive of medical care or for quarantine purposes in excess of twenty-four (24) hours. Female dogs bred for the sole purpose of the sale of puppies for profit, and female dogs numbering more than three (3) constitute a Commercial Kennel.

**KENNEL, NONCOMMERCIAL**: A kennel at, in, or adjoining a private residence where more than two (2) dogs or cats are kept for the hobby of the householder in using them in shows or obedience trials, personal pleasure or for the guarding or protecting of the householder's property. The occasional raising of a litter of puppies or kittens at the kennel and the occasional sale of puppies or kittens by the keeper of a noncommercial kennel should in no way change the character of the residential property.

**LANDSCAPING**: The combination of living and nonliving elements, as further described in BMCC Sections 27-1101, et seq.

**LIVESTOCK & FOWL**: Livestock shall include all animals of the equine, bovine and swine class, including goats, sheep, mules, horses, hogs, cattle and other grazing animals. Fowl shall include chickens, geese, ducks, turkeys and other poultry.

**LOT**: A tract of land, no matter how legally described whether by metes and bounds, Certificate of Survey and/or by lots and block designation as in a recorded plat.

**LOT AREA**: The total area circumscribed by the boundaries of a lot, except that when the legal instrument creating a lot extends into a public street right-of-way and/or easement, then the lot boundary for purposes of computing the lot area shall be the street right-of-way.

**LOT COVERAGE**: The total area of a lot covered by buildings or roofed areas, excluding allowed projecting eaves, balconies and similar features. Lot coverage includes, but is not necessarily limited to the following: principle structures, accessory structures, carports, and covered decks and patios. Uncovered decks less than thirty (30) inches in height shall not be counted towards lot coverage.

**LOT FRONTAGE**: That portion of the lot nearest the public street. For the purpose of determining yard requirements on corner lots and through lots, all sides of a lot adjacent to public streets shall be considered frontage, and yards shall be provided as indicated in BMCC Sections 27-308 and 27-309, District Regulations.

**LOT LINE:** A line of record bounding a lot which divides one lot from another lot or from a public or private street, alley or other public space.

(1) **FRONT LOT LINE**: The lot line or lines abutting a public or private street.

(2) **REAR LOT LINE**: The lot line not intersecting a front lot line that is most distant from and most clearly parallel to the front lot line.

(3) **SIDE LOT LINE**: Any lot line that is not a front or a rear lot line.

**LOT TYPES**:

(1) **CORNER LOT**: A lot located at the intersection of two (2) or more streets.

(2) **INTERIOR LOT**: A lot other than a corner lot with only one (1) frontage on a street other than an alley.

(3) **THROUGH LOT OR DOUBLE FRONTAGE LOT**: A lot other than a corner lot with frontage on more than one (1) street other than an alley.

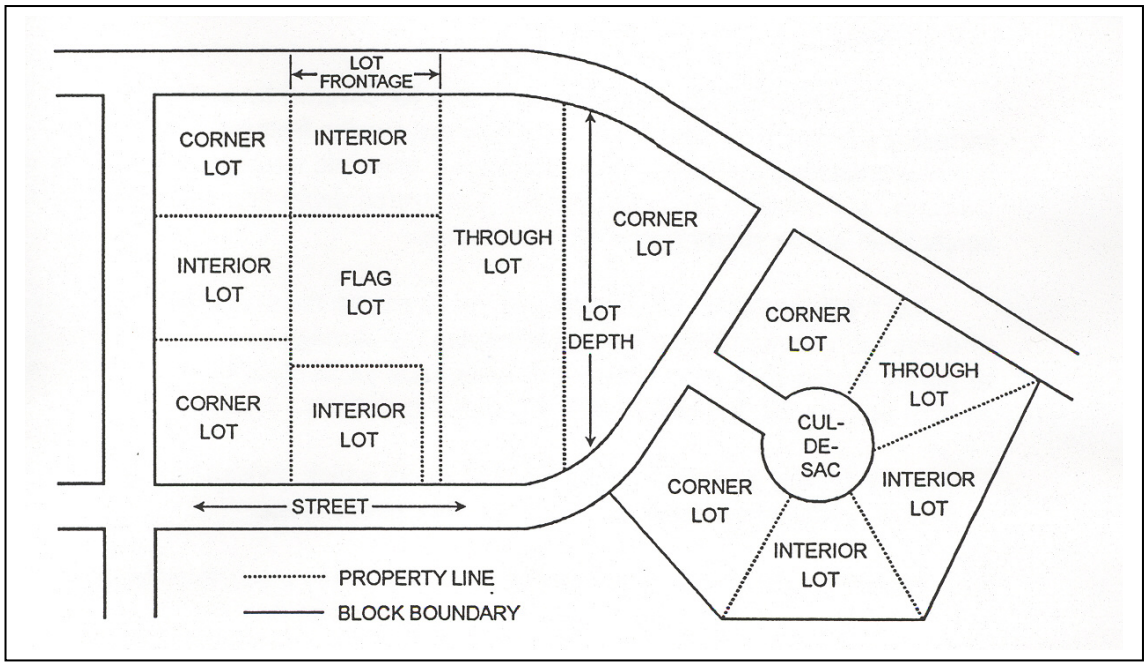


**MANUFACTURED HOME**: A factory assembled structure or structures, equipped with the service connections necessary to be used as a dwelling unit, and constructed to be readily movable as a unit or units either on its own running gear or other system. Since 1976 manufactured home construction has been regulated by the federal Manufactured Housing Construction and Safety Standards Act as administered by the Department of Housing and Urban Development (HUD), and are not constructed in accordance with the standards set forth in the Uniform Building Code, applicable to site-built homes. See BMCC Section 27-608.

**MANUFACTURED HOME PARK OR COURT**: Land designed or used that contains temporary or permanent parking for two (2) or more manufactured homes spaces which are available to the general public for use as residences. This term does not include a parcel composed of individually platted lots, each lot of which is filed with the Yellowstone County Clerk and Recorder, which contain only one manufactured home per lot.

**MEDICAL CORRIDOR**: The area defined by the Billings Medical Corridor Study as the medical development impact area. This area is of special concern to the city as a potential location for medical or medically related uses, as well as, supporting uses and residential development. See BMCC Sections 27-901, et seq.

**MOBILE HOME OR TRAILER**: *See* **MANUFACTURED HOME**.

**MOTEL**: A group of attached or detached buildings containing individual sleeping units where a majority of such units open individually and directly to the outside, or to a common corridor and where a garage is attached to or a parking space is conveniently located at each unit,

all for the temporary use, being less than thirty (30) days, by automobile tourist or transient and such word shall include tourist courts, motor courts, automobile courts and motor lodges.

**NONCONFORMING LOT**: See BMCC Section 27-402.

**NONCONFORMING STRUCTURE**: See BMCC Section 27-404.

**NONCONFORMING USE**: See BMCC Sections 27-403 and 27-405.

**NURSING HOMES, CONVALESCENT HOMES, ORPHANAGES & CHARITABLE INSTITUTIONS**: A home operated similarly to a boarding house but not restricted to any number of guests or guest rooms, and the operator of which is licensed by the state, city or county to give special care and supervision to his/her patients. In such homes, nursing, dietary and other personal services are furnished to convalescents, invalids and aged persons, but within which homes are kept no persons suffering from a contagious or communicable disease, and within which are performed no surgery, maternity or other primary treatments such as are customarily provided in sanitariums or hospitals, and within which no persons are kept to be served who normally would be admitted to a mental hospital. Adult Foster Family Care Homes are not included in this definition.

**OCCUPIED**: Includes the words intended, designated or arranged to be occupied.

**PARKING, PUBLIC**: An open area other than a street used for the temporary parking of more than four (4) automobiles and available for public use whether free, for compensation or as an accommodation for clients or customers.

**PAWN SHOP**: *See* **SECONDHAND STORE AND/OR ANTIQUE SHOPS**.

**PLANNED DEVELOPMENT**: See BMCC Sections 27-1301, et seq.

**PLANNING BOARD**: The Yellowstone County Board of Planning as authorized under the provisions of M.C.A., Title 76, Chapter 1, Part 1, Section 76-1-101.

**PLANNING DIRECTOR**: The individual appointed by the City, after consideration of the recommendations from the County Commissioners and Board of Planning. The Director's duties and responsibilities shall be those defined in the Interlocal Agreement on Planning.

**PRINCIPAL USE:** The primary or predominant use to which the property is or may be devoted, and to which all other uses on the premises are accessory. The uses listed in BMCC Sections 27-305 and 27-306, District Regulations, are principal uses.

**PROJECT ANIMAL**: An animal raised exclusively for educational purposes and/or for participation in programs such as F.F.A., 4-H, or other similar types of programs.

**PROJECTION**: The distance any part of a structure extends beyond the building setback line. See BMCC Section 27-310 for a list of permitted projections.

**RECREATION, COMMERCIAL**: An area operated for profit and devoted to facilities and equipment for recreational purposes; swimming pools, tennis courts, playgrounds, golf courses, community clubhouses and other similar uses whether the use of such area is limited to private membership or whether open to the public upon the payment of a fee or service charge.

**RECREATION, NONCOMMERCIAL**: An area devoted to facilities and equipment for recreational purposes; swimming pools, tennis courts, playgrounds, community clubhouses

and other similar uses maintained and operated by a nonprofit club, homeowners' association or other corporate structure and whose membership is limited to the residents within the area.

**RECREATIONAL VEHICLE:** *See* **TRAVEL TRAILER**.

**RECREATIONAL VEHICLE PARK**: *See* **TRAVEL TRAILER PARK**.

**RECYCLING CENTER**: A facility that is not a junkyard and in which recoverable resources, such as newspaper, glassware and metal cans are collected, stored, flattened, crushed or bundled. This term does not include automobile or vehicle salvage or wrecking yards.

**REHABILITATIVE CENTER**: A use providing board and room, recreational, counseling and other rehabilitative services to individuals of either sex, who by reason of mental or physical disability, family and school adjustment problems, require specialized attention and care in order to achieve personal independence. An individual participating in a work release, or similar program, such as pre-release centers, from a state institution and under the supervision of a court, state or local agency shall be included within this definition.

**RETIREMENT HOME**: A place of residence for several families or individuals in apartment-like quarters, rented or condominiums, which may feature services to retired persons such as limited nursing facilities, minimum maintenance living accommodations and recreation programs and facilities.

**RIGHT-OF-WAY**: A strip of land dedicated or acquired for use as a public way, or that is acquired through an easement.

**SATELLITE DISH ANTENNA**: See BMCC Section 27-610.

**SCHOOL, COLLEGE OR UNIVERSITY**: A public or private institution for higher learning (beyond grade 12) providing instruction as approved by the Montana Department of Education or a national collegiate or university accreditation agency.

**SCHOOL, ELEMENTARY, JUNIOR, AND SENIOR HIGH, INCLUDING PUBLIC, PRIVATE AND PAROCHIAL**: An institution of learning which offers instruction in the several branches of learning and study required to be taught in the schools by the Montana State Board of Education.

**SCHOOL, TRADE OR VOCATIONAL-TECHNICAL**: A building where instruction is given to pupils in arts, crafts, or trades and operated as a commercial enterprise as distinguished from schools endowed and/or supported by taxation.

**SCRAP OR WASTE PROCESSING YARD**: *See* **JUNKYARD**.

**SECONDHAND STORE AND/OR ANTIQUE STORE**: Any retail establishment in which the principal portion of the articles, commodities, or merchandise handled, offered for sale, or sold on the premises are used or not new. Pawn shops are included in this definition.

**SERVICE STATION, AUTOMOBILE**: A place where fuel and/or lubricants are dispensed at retail and where light maintenance activities such as engine tune-ups, lubrication, tire repair, battery servicing and air conditioning service may be conducted. Service stations do not include premises where heavy automobile maintenance activities such as engine overhauls, automobile painting, body work and/or drive-train repair and rebuilding are conducted.

**SETBACK**: That distance measured from the lot or property line to a supporting point(s) or wall(s) of a structure or building.

**SEXUALLY ORIENTED BUSINESS**: An "adult" arcade, "adult" bookstore, "adult" video store, "adult" motel or "adult" motion picture theater, as those terms are defined in BMCC Section 27-611.

**STABLE, PRIVATE**: A detached accessory building in which horses or other beasts of burden owned by the occupant of the premises are kept, and in which no such animals are kept for hire, remuneration or sale, and are kept for the owner's private use only.

**STABLE, COMMERCIAL**: A stable other than a private stable.

**STORY**: That portion of a building included between the upper surface of any floor and the upper surface of the floor next above, except that the topmost story shall be that portion of a building included between the upper surface of the topmost floor and the ceiling or roof above. If the finished floor level directly above a basement, cellar or unused under-floor space is more than six (6) feet above grade as defined herein for more than fifty percent (50%) of the total perimeter or is more than twelve (12) feet above grade as defined herein at any point, such basement, cellar or unused under-floor space shall be considered a story.

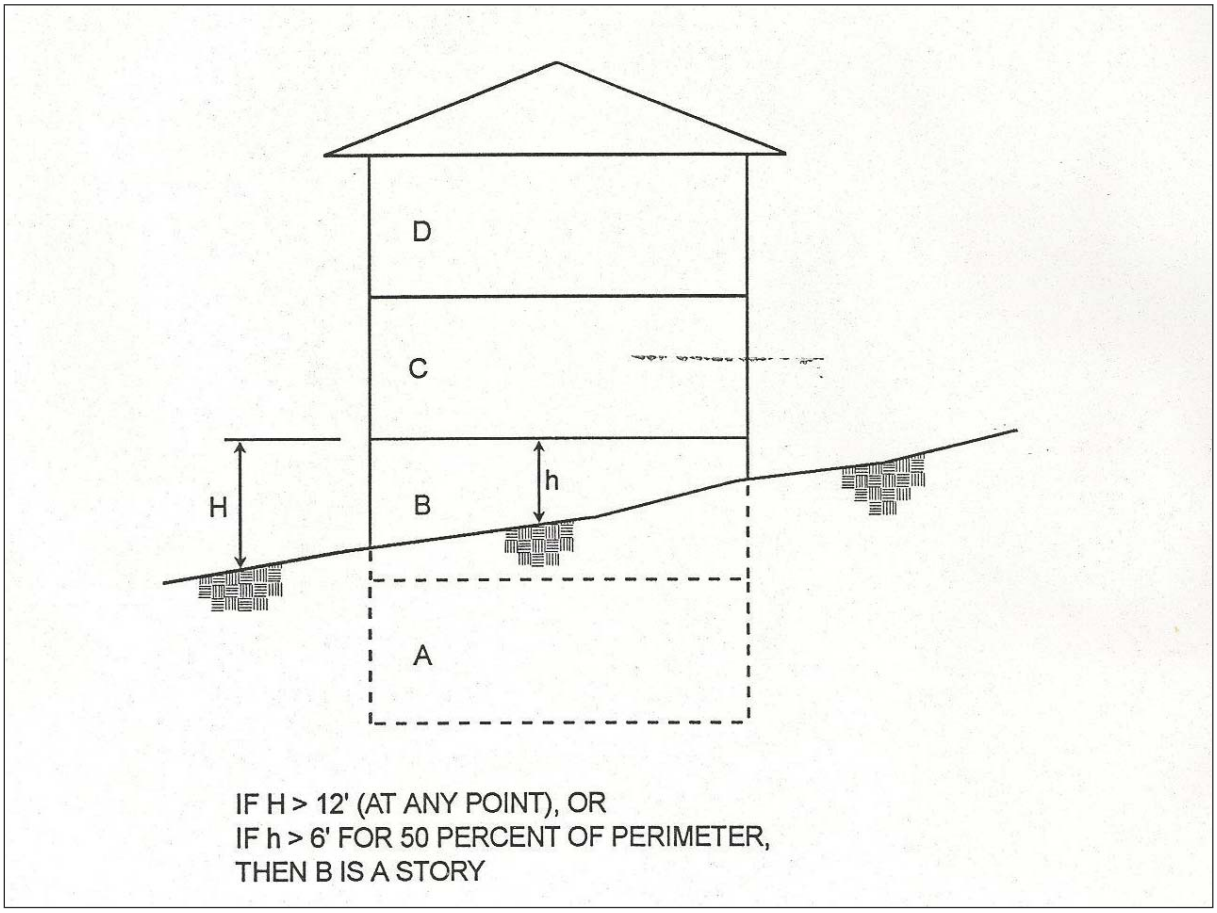

**STREETS**:

(1) **STREET**: A public way for vehicular traffic, whether designated as a street, highway, thoroughfare, parkway, throughway, road, avenue, boulevard, land, place, or however otherwise designated which has been dedicated to or acquired for public use and which extends the full width between right-of-way lines, which includes areas acquired or prescribed through an easement.

(2) **ALLEY**: A minor way which is used primarily for vehicular service access or for utility lines to the back or the side of properties otherwise abutting on a street.

(3) **ARTERIAL STREET**: A street which is intended to provide for high operating speeds, high levels of service and to serve longer trips through access management and the interconnection of major development areas such as the central business district, large commercial and industrial developments and major residential areas.

(4) **COLLECTOR STREET**: A street that functions as a link between local streets and arterial streets and provides both access and movement functions within residential, commercial and industrial areas.

(5) **CUL-DE-SAC**: A street that terminates in a vehicular turnaround.

(6) **LOCAL STREET**: A street whose primary function is access and whose movement function is incidental and involves traveling to and from a collector. In addition, local streets are characterized by short trip lengths, low traffic volumes, slow speeds and deliberately discouraging through traffic.

**STRUCTURE**: A building or anything constructed in the ground or anything erected which requires location on the ground or water, or is attached to something having location on or in the ground, but not including fences less than six (6) feet in height or paved areas.

**STRUCTURE, PRINCIPAL**: A structure accommodating the principal use to which the property is devoted.

**TEMPORARY STRUCTURE**: A structure established for a fixed period of time as established by this chapter.

**TEMPORARY USE**: A use established for a fixed period of time as established by this chapter.

**THEATER, DRIVE-IN**: An establishment to provide entertainment through projection of motion pictures on an outdoor screen for audiences whose seating accommodations are provided by their own motor vehicles parked in car spaces provided on the same site with the outdoor screen.

**TOWNHOUSE**: A building or structure that has two (2) or more one (1) family dwelling units erected as a single building, each being separated from the adjoining unit or units by an approved fire wall or walls along individual property lines and providing for fee simple ownership of land and dwelling unit.

**TRAILER SALES AREA**: *See* **VEHICLE SALES AREA**.

**KENNEL, COMMERCIAL**: Any lot, building, structure or premises where more than two (2) dogs or cats over the age of six (6) months, other than those owned by the kennel owner are kept or maintained for boarding, training, breeding or selling, exclusive of medical care or for quarantine purposes in excess of twenty-four (24) hours. Female dogs bred for the sole purpose of the sale of puppies for profit, and female dogs numbering more than three (3) constitute a Commercial Kennel.

**KENNEL, NONCOMMERCIAL**: A kennel at, in, or adjoining a private residence where more than two (2) dogs or cats are kept for the hobby of the householder in using them in shows or obedience trials, personal pleasure or for the guarding or protecting of the householder's property. The occasional raising of a litter of puppies or kittens at the kennel and the occasional sale of puppies or kittens by the keeper of a noncommercial kennel should in no way change the character of the residential property.

**LIMITED PHARMACEUTICAL MANUFACTURING:** Establishments primarily engaged in manufacturing bulk organic and inorganic medicinal chemicals and their derivatives and processing bulk botanical drugs and herbs. This definition also includes premises engaged in manufacturing, fabricating, or processing drugs in pharmaceutical preparations for human or veterinary use.

**LANDSCAPING**: The combination of living and nonliving elements, as further described in BMCC Sections 27-1101, et seq.

**LIVESTOCK & FOWL**: Livestock shall include all animals of the equine, bovine and swine class, including goats, sheep, mules, horses, hogs, cattle and other grazing animals. Fowl shall include chickens, geese, ducks, turkeys and other poultry.

**LOT**: A tract of land, no matter how legally described whether by metes and bounds, Certificate of Survey and/or by lots and block designation as in a recorded plat.

**LOT AREA**: The total area circumscribed by the boundaries of a lot, except that when the legal instrument creating a lot extends into a public street right-of-way and/or easement, then the lot boundary for purposes of computing the lot area shall be the street right-of-way.

**LOT COVERAGE**: The total area of a lot covered by buildings or roofed areas, excluding allowed projecting eaves, balconies and similar features. Lot coverage includes, but is not necessarily limited to the following: principle structures, accessory structures, carports, and covered decks and patios. Uncovered decks less than thirty (30) inches in height shall not be counted towards lot coverage.

**LOT FRONTAGE**: That portion of the lot nearest the public street. For the purpose of determining yard requirements on corner lots and through lots, all sides of a lot adjacent to public streets shall be considered frontage, and yards shall be provided as indicated in BMCC Sections 27-308 and 27-309, District Regulations.

**LOT LINE:** A line of record bounding a lot which divides one lot from another lot or from a public or private street, alley or other public space.

(4) **FRONT LOT LINE**: The lot line or lines abutting a public or private street.

(5) **REAR LOT LINE**: The lot line not intersecting a front lot line that is most distant from and most clearly parallel to the front lot line.

(6) **SIDE LOT LINE**: Any lot line that is not a front or a rear lot line.

**LOT TYPES**:

(4) **CORNER LOT**: A lot located at the intersection of two (2) or more streets.

(5) **INTERIOR LOT**: A lot other than a corner lot with only one (1) frontage on a street other than an alley.

(6) **THROUGH LOT OR DOUBLE FRONTAGE LOT**: A lot other than a corner lot with frontage on more than one (1) street other than an alley.

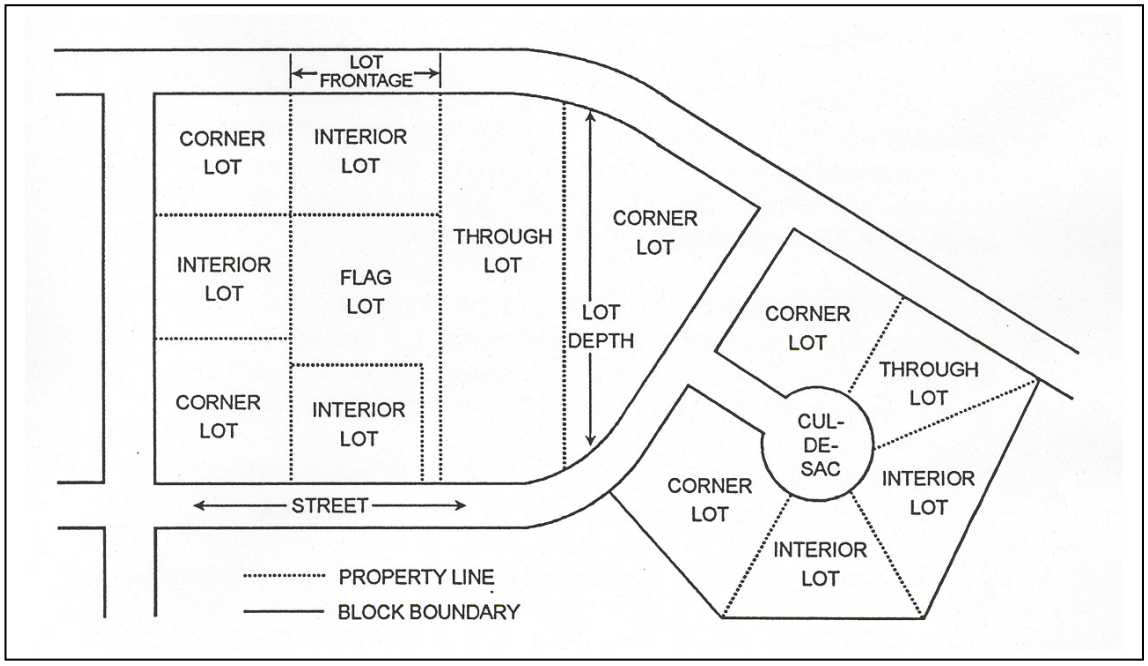


**MANUFACTURED HOME**: A factory assembled structure or structures, equipped with the service connections necessary to be used as a dwelling unit, and constructed to be readily movable as a unit or units either on its own running gear or other system. Since 1976 manufactured home construction has been regulated by the federal Manufactured Housing Construction and Safety Standards Act as administered by the Department of Housing and Urban Development (HUD), and are not constructed in accordance with the standards set forth in the Uniform Building Code, applicable to site-built homes. See BMCC Section 27-608.

**MANUFACTURED HOME PARK OR COURT**: Land designed or used that contains temporary or permanent parking for two (2) or more manufactured homes spaces which are available to the general public for use as residences. This term does not include a parcel composed of individually platted lots, each lot of which is filed with the Yellowstone County Clerk and Recorder, which contain only one manufactured home per lot.

**MEDICAL CORRIDOR**: The area defined by the Billings Medical Corridor Study as the medical development impact area. This area is of special concern to the city as a potential location for medical or medically related uses, as well as, supporting uses and residential development. See BMCC Sections 27-901, et seq.

**MOBILE HOME OR TRAILER**: *See* **MANUFACTURED HOME**.

**MOTEL**: A group of attached or detached buildings containing individual sleeping units where a majority of such units open individually and directly to the outside, or to a common corridor and where a garage is attached to or a parking space is conveniently located at each unit, all for the temporary use, being less than thirty (30) days, by automobile tourist or transient and such word shall include tourist courts, motor courts, automobile courts and motor lodges.

**NONCONFORMING LOT**: See BMCC Section 27-402.

**NONCONFORMING STRUCTURE**: See BMCC Section 27-404.

**NONCONFORMING USE**: See BMCC Sections 27-403 and 27-405.

**NURSING HOMES, CONVALESCENT HOMES, ORPHANAGES & CHARITABLE INSTITUTIONS**: A home operated similarly to a boarding house but not restricted to any number of guests or guest rooms, and the operator of which is licensed by the state, city or county to give special care and supervision to his/her patients. In such homes, nursing, dietary and other personal services are furnished to convalescents, invalids and aged persons, but within which homes are kept no persons suffering from a contagious or communicable disease, and within which are performed no surgery, maternity or other primary treatments such as are customarily provided in sanitariums or hospitals, and within which no persons are kept to be served who normally would be admitted to a mental hospital. Adult Foster Family Care Homes are not included in this definition.

**OCCUPIED**: Includes the words intended, designated or arranged to be occupied.

**PARKING, PUBLIC**: An open area other than a street used for the temporary parking of more than four (4) automobiles and available for public use whether free, for compensation or as an accommodation for clients or customers.

**PAWN SHOP**: *See* **SECONDHAND STORE AND/OR ANTIQUE SHOPS**.

**PLANNED DEVELOPMENT**: See BMCC Sections 27-1301, et seq.

**PLANNING BOARD**: The Yellowstone County Board of Planning as authorized under the provisions of M.C.A., Title 76, Chapter 1, Part 1, Section 76-1-101.

**PLANNING DIRECTOR**: The individual appointed by the City, after consideration of the recommendations from the County Commissioners and Board of Planning. The Director's duties and responsibilities shall be those defined in the Interlocal Agreement on Planning.

**PRINCIPAL USE:** The primary or predominant use to which the property is or may be devoted, and to which all other uses on the premises are accessory. The uses listed in BMCC Sections 27-305 and 27-306, District Regulations, are principal uses.

**PROJECT ANIMAL**: An animal raised exclusively for educational purposes and/or for participation in programs such as F.F.A., 4-H, or other similar types of programs.

**PROJECTION**: The distance any part of a structure extends beyond the building setback line. See BMCC Section 27-310 for a list of permitted projections.

**RECREATION, COMMERCIAL**: An area operated for profit and devoted to facilities and equipment for recreational purposes; swimming pools, tennis courts, playgrounds, golf courses, community clubhouses and other similar uses whether the use of such area is limited to private membership or whether open to the public upon the payment of a fee or service charge.

**RECREATION, NONCOMMERCIAL**: An area devoted to facilities and equipment for recreational purposes; swimming pools, tennis courts, playgrounds, community clubhouses and other similar uses maintained and operated by a nonprofit club, homeowners' association or other corporate structure and whose membership is limited to the residents within the area.

**RECREATIONAL VEHICLE:** *See* **TRAVEL TRAILER**.

**RECREATIONAL VEHICLE PARK**: *See* **TRAVEL TRAILER PARK**.

**RECYCLING CENTER**: A facility that is not a junkyard and in which recoverable resources, such as newspaper, glassware and metal cans are collected, stored, flattened, crushed or bundled. This term does not include automobile or vehicle salvage or wrecking yards.

**REHABILITATIVE CENTER**: A use providing board and room, recreational, counseling and other rehabilitative services to individuals of either sex, who by reason of mental or physical disability, family and school adjustment problems, require specialized attention and care in order to achieve personal independence. An individual participating in a work release, or similar program, such as pre-release centers, from a state institution and under the supervision of a court, state or local agency shall be included within this definition.

**RETIREMENT HOME**: A place of residence for several families or individuals in apartment-like quarters, rented or condominiums, which may feature services to retired persons such as limited nursing facilities, minimum maintenance living accommodations and recreation programs and facilities.

**RIGHT-OF-WAY**: A strip of land dedicated or acquired for use as a public way, or that is acquired through an easement.

**SATELLITE DISH ANTENNA**: See BMCC Section 27-610.

**SCHOOL, COLLEGE OR UNIVERSITY**: A public or private institution for higher learning (beyond grade 12) providing instruction as approved by the Montana Department of Education or a national collegiate or university accreditation agency.

**SCHOOL, ELEMENTARY, JUNIOR, AND SENIOR HIGH, INCLUDING PUBLIC, PRIVATE AND PAROCHIAL**: An institution of learning which offers instruction in the several branches of learning and study required to be taught in the schools by the Montana State Board of Education.

**SCHOOL, TRADE OR VOCATIONAL-TECHNICAL**: A building where instruction is given to pupils in arts, crafts, or trades and operated as a commercial enterprise as distinguished from schools endowed and/or supported by taxation.

**SCRAP OR WASTE PROCESSING YARD**: *See* **JUNKYARD**.

**SECONDHAND STORE AND/OR ANTIQUE STORE**: Any retail establishment in which the principal portion of the articles, commodities, or merchandise handled, offered for sale, or sold on the premises are used or not new. Pawn shops are included in this definition.

**SERVICE STATION, AUTOMOBILE**: A place where fuel and/or lubricants are dispensed at retail and where light maintenance activities such as engine tune-ups, lubrication, tire repair, battery servicing and air conditioning service may be conducted. Service stations do not include premises where heavy automobile maintenance activities such as engine overhauls, automobile painting, body work and/or drive-train repair and rebuilding are conducted.

**SETBACK**: That distance measured from the lot or property line to a supporting point(s) or wall(s) of a structure or building.

**SEXUALLY ORIENTED BUSINESS**: An "adult" arcade, "adult" bookstore, "adult" video store, "adult" motel or "adult" motion picture theater, as those terms are defined in BMCC Section 27-611.

**STABLE, PRIVATE**: A detached accessory building in which horses or other beasts of burden owned by the occupant of the premises are kept, and in which no such animals are kept for hire, remuneration or sale, and are kept for the owner's private use only.

**STABLE, COMMERCIAL**: A stable other than a private stable.

**STORY**: That portion of a building included between the upper surface of any floor and the upper surface of the floor next above, except that the topmost story shall be that portion of a building included between the upper surface of the topmost floor and the ceiling or roof above. If the finished floor level directly above a basement, cellar or unused under-floor space is more than six (6) feet above grade as defined herein for more than fifty percent (50%) of the total perimeter or is more than twelve (12) feet above grade as defined herein at any point, such basement, cellar or unused under-floor space shall be considered a story.

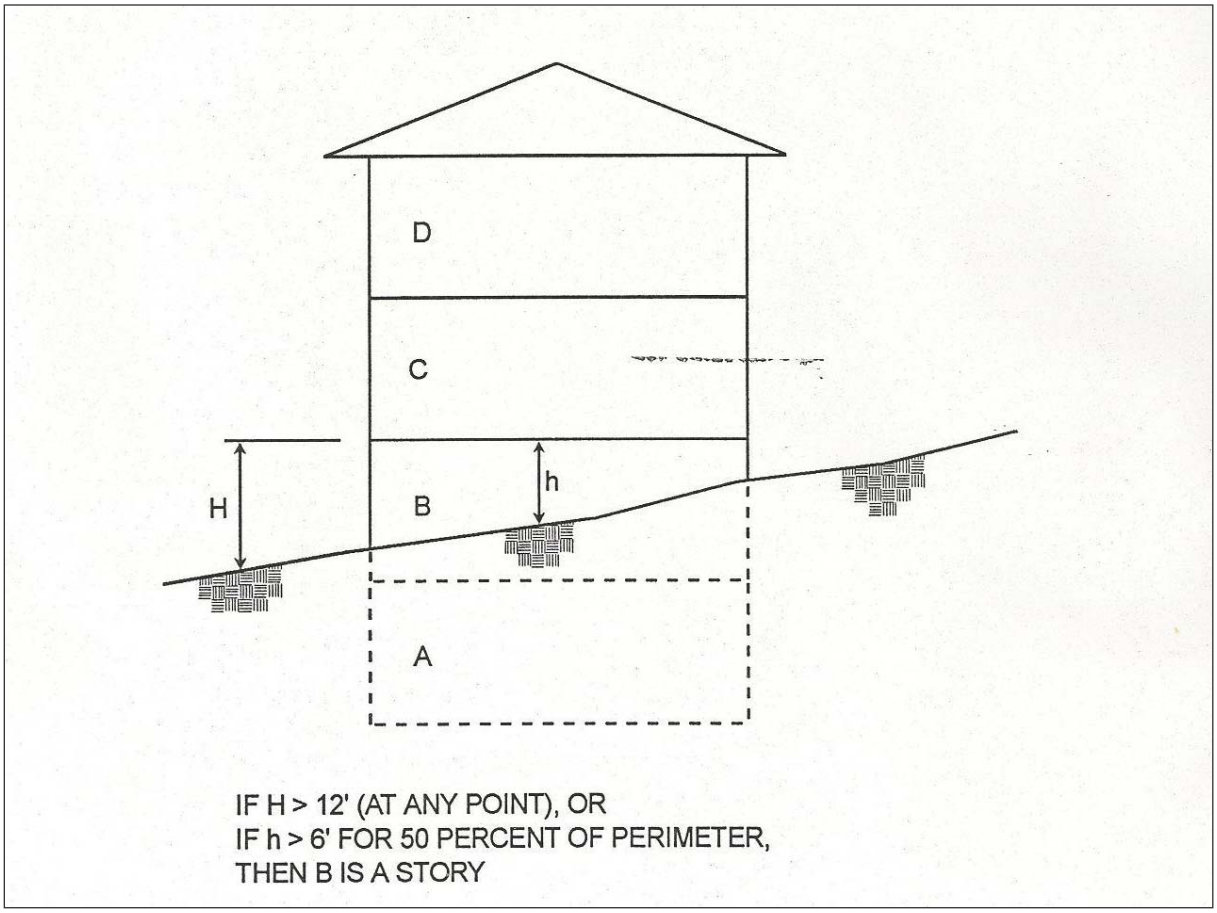

**STREETS**:

(7) **STREET**: A public way for vehicular traffic, whether designated as a street, highway, thoroughfare, parkway, throughway, road, avenue, boulevard, land, place, or however otherwise designated which has been dedicated to or acquired for public use and which extends the full width between right-of-way lines, which includes areas acquired or prescribed through an easement.

(8) **ALLEY**: A minor way which is used primarily for vehicular service access or for utility lines to the back or the side of properties otherwise abutting on a street.

(9) **ARTERIAL STREET**: A street which is intended to provide for high operating speeds, high levels of service and to serve longer trips through access management and the interconnection of major development areas such as the central business district, large commercial and industrial developments and major residential areas.

(10) **COLLECTOR STREET**: A street that functions as a link between local streets and arterial streets and provides both access and movement functions within residential, commercial and industrial areas.

(11) **CUL-DE-SAC**: A street that terminates in a vehicular turnaround.

(12) **LOCAL STREET**: A street whose primary function is access and whose movement function is incidental and involves traveling to and from a collector. In addition, local streets are characterized by short trip lengths, low traffic volumes, slow speeds and deliberately discouraging through traffic.

**STRUCTURE**: A building or anything constructed in the ground or anything erected which requires location on the ground or water, or is attached to something having location on or in the ground, but not including fences less than six (6) feet in height or paved areas.

**STRUCTURE, PRINCIPAL**: A structure accommodating the principal use to which the property is devoted.

**TEMPORARY STRUCTURE**: A structure established for a fixed period of time as established by this chapter.

**TEMPORARY USE**: A use established for a fixed period of time as established by this chapter.

**THEATER, DRIVE-IN**: An establishment to provide entertainment through projection of motion pictures on an outdoor screen for audiences whose seating accommodations are provided by their own motor vehicles parked in car spaces provided on the same site with the outdoor screen.

**TOWNHOUSE**: A building or structure that has two (2) or more one (1) family dwelling units erected as a single building, each being separated from the adjoining unit or units by an approved fire wall or walls along individual property lines and providing for fee simple ownership of land and dwelling unit.

**TRAILER SALES AREA**: *See* **VEHICLE SALES AREA**.

**TRAVEL TRAILER**: A portable structure, not more than eight (8) feet wide, built on a chassis designed to be used as a temporary dwelling for travel, recreational and vacation use. Recreational Vehicles are included within this definition.

**TRAVEL TRAILER PARK**: Any area or tract of land designed or used that contains two (2) or more spaces which are available for rent to the general public for parking or placement of temporary recreational or vacation housing units. This term does not include a parcel composed of individually platted lots.

**TRUCK STOP**: Any occupancy which provides a service for highway travel directly or indirectly related to the servicing, repairing, and/or refueling of semi-trucks (also commonly known as tractors), semi-trailers, and their components. A truck stop is a point at which semi-trucks may stop for refueling or where truck drivers can park their trucks, trailers and components and seek lodging and/or food services, as well as, other services related to highway trucking needs.

**TRUCK WASH**: A building or area that provides facilities specifically designed for washing and cleaning semi-tractors and/or semi-trailers and recreational vehicles, which may use production line methods with a conveyor, blower or other mechanical devices. This term also includes facilities which require hand labor in the cleaning of the vehicle.

**USABLE OPEN SPACE**: That space on the same lot and contiguous to the principal building or buildings and which is either landscaped or developed and maintained for recreational purposes and excludes that portion of the lot which is utilized for off-street parking or loading space or for front yard setback requirements. Usable open spaces can be provided within a building or the roof top where facilities are provided for residents of the development.

**USED**: Includes the words intended, designated or arranged to be used.

**UTILITY, PUBLIC**: A private business organization performing some public service and subject to special governmental regulations or a governmental agency performing similar public services, the services by either of which are paid for directly by the recipients thereof. Such services shall include, but are not limited to, water supply, electric power, gas and transportation for persons and freight.

**VARIANCE**: See BMCC Sections 27-1501, et seq.

**VEHICLE SALES AREA**: An open area other than a street, used for the display, sale or rental of new or used automobiles, boats, trailers, motorcycles, snowmobiles or semi-tractors and/or trailers; and where no repair work is done except minor incidental repair excluding body and fender work or spray painting on the vehicle(s) to be displayed, sold or rented on the premises.

**WALKING DISTANCE**: That distance measured along the shortest path accessible to foot traffic.

**WATERCOURSE**: Any natural stream, river, creek or drainage in which water flows either continuously or intermittently and has a definite channel, bed and banks, and includes any area adjacent thereto subject to inundation by reason of overflow. This term shall not include any facility created exclusively for the conveyance of irrigation water.

**WHOLESALE**: An establishment primarily engaged in the sale of goods and merchandise for resale instead of for direct consumption.

**YARD**: An open space about a building, other than a court, unoccupied and unobstructed from the ground to the sky, except as otherwise specifically provided in this Chapter.

(1) **FRONT YARD**: A yard extending along the full length of the front lot line or lines and which is situated between a principal building and the front lot line or lines.

(2) **REAR YARD**: A yard extending along the full length of a rear lot line and situated between the principal building and the rear lot line.

(3) **SIDE YARD**: A yard not designated as a front or a rear yard.

**YOUTH FOSTER HOME**: *See* **COMMUNITY RESIDENTIAL FACILITIES**.

**YOUTH GROUP HOME**: *See* **COMMUNITY RESIDENTIAL FACILITIES**.

**ZONING COORDINATOR**: The person designated by the Planning Director to oversee the administration of this Chapter, unless otherwise noted.[1]

---

(Ord. No. 97-5048, § 2, 12-22-97; Ord. No. 04-5292, § 1, 7-26-04, Ord. No 05-5345)

## ARTICLE 27-300. ZONING DISTRICTS AND OFFICIAL MAP

### SEC. 27-301. ZONING DISTRICTS.

It is the intent of this Section to establish zones wherein compatible uses of land may be located to create, protect and maintain a desirable living environment, to stabilize and protect residential harmony and to conduct profitable businesses. It is also the intent of this Chapter to make it possible to efficiently and economically design and install public facilities in terms of size and capacity to adequately meet the needs resulting from a defined intensity of land use.

To carry out the provisions of this Resolution/Ordinance, the City and County 4½ Mile Jurisdictional Area is hereby divided into the following zoning districts in which the erection, construction, alteration, reconstruction, repair or use of buildings, structures and land shall be regulated and restricted. The regulations in each district shall be uniform throughout each district but may differ from those in other districts.

| | |
|---|---|
| A-1 | Agricultural-Open Space (County Only) |
| A-S | Agricultural-Suburban (County Only) |
| R-150 | Residential 15,000 (County Only) |
| R-96 | Residential 9,600 |
| R-80 | Residential 8,000 |
| R-70R | Residential 7,000 Restricted |
| R-70 | Residential 7,000 |
| R-60R | Residential 6,000 Restricted |
| R-60 | Residential 6,000 |
| R-50 | Residential 5,000 |
| RMF | Residential Multi-Family |
| RMF-R | Residential Multi-Family - Restricted |
| RMH | Residential Manufactured Home |
| RP | Residential Professional |
| NC | Neighborhood Commercial |
| CC | Community Commercial |
| HC | Highway Commercial |
| CBD | Central Business District |
| CI | Controlled Industrial |
| HI | Heavy Industrial |
| P | Public |
| ELC | Entryway Light Commercial |
| EGC | Entryway General Commercial |

| | |
|---|---|
| EMU | Entryway Mixed Use |
| ELI | Entryway Light Industrial |
| | South 27th Street Corridor Zoning District |
| | Medical Corridor Permit Zoning District |
| | Shiloh Corridor Overlay District |

*A-1* *AGRICULTURAL-OPEN SPACE (COUNTY ONLY):* A district to protect and preserve agricultural lands for the performance of a wide range of agricultural functions. The intent is to limit the scattered intrusion of uses not compatible with an agricultural environment; to encourage agricultural pursuits and protect environmental concerns.

*A-S* *AGRICULTURAL-SUBURBAN (COUNTY ONLY):* A district to protect and preserve agricultural lands for the performance of limited agricultural functions and to provide a buffer between urban and unlimited agricultural uses and to encourage concentration of such uses in areas so that potential conflict between uses will be minimized.

*R-150* *RESIDENTIAL 15,000 (COUNTY ONLY):* A zone intended to provide for low density, single-family residential developments in areas which may or may not be serviced by a public water and/or sewer system.

*R-96* *RESIDENTIAL 9,600:* A zone intended to promote primarily a single-family residential environment on lots that are served by public water and sewer service.

*R-80* *RESIDENTIAL 8,000:* A residential zone intended to primarily provide a single-family residential environment with provisions for duplexes that are served by public water and sewer service.

*R-70R* *RESIDENTIAL 7,000 RESTRICTED:* A residential zone intended to primarily provide a single family residential environment on smaller lots at a medium density that are served by a public water and sewer service.

*R-70* *RESIDENTIAL 7,000:* Primarily a single-family residence district, with provisions for duplexes on lots that are served by public water and sewer services.

*R-60R* *RESIDENTIAL 6,000 RESTRICTED:* A residential zone intended to primarily provide a single family residential environment on smaller lots at a medium density that are served by a public water and sewer service.

*R-60* *RESIDENTIAL 6,000*: A zone intended to provide for medium density residential dwellings on lots served by public water and sewer services, with provisions for multi-family dwellings with a maximum of ten (10) dwelling units per structure.

*R-50* *RESIDENTIAL 5,000:* A primarily single-family district provides for higher density development on lots served by public water and sewer services, with provisions for duplexes.

*RMF* *RESIDENTIAL MULTI-FAMILY:* A residential classification intended to provide adequate sites for multi-family developments including high-rise apartment complexes. Dwelling unit density is increased in this classification to encourage development in areas where it will complement existing developments. Land within the classification

should be located with access to major arterial transportation routes plus financial, cultural and retail stores and be served by public water and sewer services.

*RMF-R* *RESIDENTIAL MULTI-FAMILY - RESTRICTED:* A residential classification intended to provide adequate sites for multi-family developments. The classification is intended to provide higher density apartment development, which may establish a buffer between single-family residence areas and other zoning classifications. Lots are to be served by public water and sewer services.

*RMH* *RESIDENTIAL MANUFACTURED HOME:* A zone intended to provide stable environments for individual manufactured homes, manufactured home parks and compatible accessory uses.

*RP* *RESIDENTIAL PROFESSIONAL:* A zone intended to accommodate limited commercial and professional offices as would be compatible with adjoining residential districts and consistent with the objectives of the comprehensive plan.

*NC* *NEIGHBORHOOD COMMERCIAL:* A zone for commercial centers and limited retail activities conducted in a unified development designed to serve the surrounding neighborhood with shopping facilities consisting of convenience retail and personal service establishments which secure their principal trade by supplying the daily needs of the neighboring population. Only uses serving the above purpose without undue detriment to surrounding residences should be permitted.

*CC* *COMMUNITY COMMERCIAL:* The Community Commercial zone is intended primarily to accommodate community retail, service and office facilities offering a greater variety than would normally be found in a neighborhood or convenience retail development. Facilities within the classification will generally serve the community, and is commensurate with the purchasing power and needs of the present and potential population within the trade area. It is intended that these business facilities be provided in business corridors or in islands (thirty (30) acres) centrally located in the trade area rather than a strip development along arterials.

*HC* *HIGHWAY COMMERCIAL:* The Highway Commercial zone is intended to provide areas for commercial and service enterprises which are intended primarily to serve the needs of the tourist, traveler, recreationist or the general traveling public. Areas designated as Highway Commercial should be located in the vicinity of, and accessible from interstate interchanges, intersections on limited access highways, or adjacent to primary or secondary highways. The manner in which the services and commercial activities are offered should be carefully planned in order to minimize the hazard to the safety of the surrounding community and those who use such facilities.

*CBD* *CENTRAL BUSINESS DISTRICT:* The Central Business District classification is intended to primarily accommodate stores, hotels, governmental and cultural centers and service establishments at the central focal point of the city's arterial and transportation system, where the C.B.D. can conveniently serve the population of the entire urban area with a varied and specialized selection of goods and services. In order to protect the public interest and welfare and facilitate an attractive, efficient and prosperous C.B.D., the emphasis is on larger scale building and specialty shops.

*CI* *CONTROLLED INDUSTRIAL:* The Controlled Industrial zone is intended to accommodate a variety of business, warehouse and light industrial uses related to wholesale plus other business and light industries not compatible with other commercial zones, but which need not be restricted in industrial or general commercial zones, and to provide locations directly accessible to arterial and other transportation systems where they can conveniently serve the business and industrial centers of the city and county.

*HI* *HEAVY INDUSTRIAL:* A zone intended to accommodate manufacturing, processing, fabrication, and assembly of materials and products. Areas designated as Heavy Industrial should have access to two (2) or more major transportation routes, and such sites should have adjacent space for parking and loading facilities.

*P* *PUBLIC:* The Public zone is intended to reserve land exclusively for public or semi-public uses in order to preserve and provide adequate land for a variety of community facilities which serve the public health, safety and general welfare.

*ELC* *Entryway Light Commercial:* See BMCC Section 27-1004.

*EGC* *Entryway General Commercial:* See BMCC Section 27-1004.

*EMU* *Entryway Mixed Use:* See BMCC Section 27-1004.

*SOUTH 27th STREET CORRIDOR ZONING DISTRICT*: See BMCC Sections 27-801, et seq.

*MEDICAL CORRIDOR PERMIT ZONING DISTRICT*: See BMCC Sections 27-901, et seq.

## SEC. 27-302. OFFICIAL ZONING MAP.

(a) The City and County are hereby divided into zoning districts as shown on the Official Zoning Map which, together with all explanatory matter thereon, is hereby adopted by reference and declared to be a part of this Resolution/Ordinance.

(b) The Official Zoning Map shall be identified by the signature of the Mayor attested by the City Clerk and also by the County Commissioners attested by the County Clerk and Recorder and shall bear the words "The Official Zoning Map of the City of Billings and Yellowstone County, Montana 4 ½ Mile Jurisdictional Area". Regardless of the existence of purported copies of the Official Zoning Map which from time to time may be made or published, a copy of the Official Map shall be located in the offices of both the Yellowstone County Board of Planning and the Yellowstone County Clerk and Recorder.

(c) Changes made in district boundaries shall be promptly entered on the Official Zoning Map after amendment by either Governing Body. Amendments to the Official Zoning Map shall not become effective until entered on the map.

(d) No changes of any nature shall be made in the Official Zoning Map or matter shown thereon except in conformity with the provisions set forth in this chapter. In the event the Official Zoning Map is damaged or destroyed, the City Council and County Commissioners may, by Resolution/Ordinance, adopt a new Official Zoning Map.

No such map shall have the effect of amending the Official Zoning Map or any subsequent amendment thereof.

## SEC. 27-303. RULES FOR INTERPRETATION OF DISTRICT BOUNDARIES.

(a) Boundaries indicated as appearing to follow the centerline of streets, highways or alleys shall be construed to follow such centerlines;

(b) Boundaries indicated as appearing to follow platted lot lines shall be construed as following such lot lines;

(c) Boundaries indicated as appearing to follow City Limits shall be construed as following City Limits;

(d) Boundaries indicated as appearing to follow 4 ½ Mile Jurisdictional Limits shall be construed as following 4 ½ Mile Jurisdictional Limits;

(e) Boundaries indicated as following railroad lines shall be construed to be midway between the main tracks;

(f) Boundaries indicated as following shore lines shall be construed to follow such shore lines. In the event of change in the shore line, they shall be construed as moving with the actual shore line. Boundaries indicated as approximately following the centerlines of streams, rivers, canals, lakes or other bodies of water shall be construed to follow such centerlines. In the event of change in the location of streams, rivers, canals, lakes or other bodies of water, the boundaries shall be construed as moving with the actual body of water and following the centerlines; and

(g) Boundaries indicated as parallel to or extensions of features indicated in above Subsections A. through F. above shall be so construed. Distances not specifically indicated on the Official Zoning Map shall be determined by the scale of the map or by specific distances enumerated in a Resolution/Ordinance amending the Official Zoning Map.

## SEC. 27-304. APPLICATION AND GENERAL RULES.

Within the various zoning districts as hereinbefore defined and as indicated on the Official Zoning Map and subject to the requirements of BMCC Sections 27-301 through 27-1511, no building or structure shall be erected, reconstructed or structurally altered, nor shall any land, building or structure be used for any purpose except as they are allowed in the district in which such building, land or use is located. The regulations set forth by this chapter within each zone shall be minimum regulations and shall apply uniformly to each class or type of structure or land except as hereinafter provided:

(a) No building, structure or land shall hereafter be used or occupied, and no building or structure or part thereof shall hereafter be erected, constructed, reconstructed, moved or structurally altered after the effective date of this chapter unless in conformity with

all of the regulations herein specified for the zone in which it is located except nonconforming uses and structures as provided in BMCC Sections 27-401, et seq.;

(b) No building or other structure shall hereafter be erected or altered:

1. To exceed the height limitation;
2. To accommodate or house a greater number of families;
3. To occupy a greater percentage of lot area; or
4. To have a narrower or smaller rear yard, front yard, side yard or other open space than herein required, or in any manner contrary to the provisions of this chapter.

(c) *Temporary Suspension of Various Zoning and other regulations.* Upon approval by resolution, the City Council may temporarily suspend the requirements and restrictions imposed by Sections 7-603, 15-602, 27-304, 27-305, 27-601 and 27-606 of the City Code in order to accommodate the temporary increase in visitor population created by large special events held within the City of Billings when the City's public lodging capability is actually or predicted to be at or near maximum capacity. The City Council may suspend ordinances related to the following general areas of regulation in any combination deemed appropriate under the circumstances created by a special event. The resolution of suspension shall become effective forty-eight (48) hours prior to the official start of the scheduled event and shall terminate forty-eight (48) hours after official conclusion of the event.[1]

1. Parking
2. Camping
3. Business licensing and/or health department inspections.

(Ord. No. 97-5048, § 3, 12-12-97; Ord. No. 98-5058, § 1, 6-8-98; Ord. No. 98-5064, § 1, 7-27-98; Ord. No. 01-5165, § 1, 8-13-01; Ord. No. 04-5292, § 1, 7-26-04)

## Sec. 27-305. District Regulations: Residential Uses.

| TITLES AND DESCRIPTION OF INDUSTRIES<br><br>SR - SPECIAL REVIEW<br>A - ALLOWED | Agricultural -Open Space | Agricultural - Suburban | Residential - 15,000 | Residential - 9,600 | Residential - 8,000 | Residential - 7,000 Restricted | Residential - 7,000 | Residential - 6,000 Restricted | Residential - 6,000 | Residential - 5,000 | Residential Multi-Family | Residential Multi-Family - Restricted | Residential Manufactured Home |
|---|---|---|---|---|---|---|---|---|---|---|---|---|---|
| ACCESSORY USES AND STRUCTURES ASSOCIATED WITH A PERMITTED PRINCIPAL STRUCTURE | A | A | A | A | A | A | A | A | A | A | A | A | A |
| AGRICULTURAL USES | A | A | | | | | | | | | | | |
| AMATEUR RADIO ANTENNA SUPPORT STRUCTURES:<br>– 100 FEET OR LESS IN HEIGHT (SEE SECTION 27-619 FOR ADDITIONAL REQUIREMENTS)<br>– GREATER THAN 100 FEET IN HEIGHT | A<br>SR | A<br>SR | A<br>SR | A<br>SR | A<br>SR | A<br>SR | A<br>SR | A<br>SR | A<br>SR | A<br>SR | A<br>SR | A<br>SR | A<br>SR |
| AUCTION HOUSES (EXCLUDING LIVESTOCK) | SR | | | | | | | | | | | | |
| AUCTION YARDS (INCLUDING LIVESTOCK) | SR | | | | | | | | | | | | |
| BLACKSMITHS | A | | | | | | | | | | | | |
| BOARDING, LODGING, AND BED AND BREAKFAST HOUSES | SR | SR | SR | SR | SR | SR | SR | SR | SR | SR | SR | SR | SR |
| BROADCASTING (RADIO AND TELEVISION) STATIONS AND STUDIOS AND ANTENNA SUPPORT STRUCTURES (SEE SECTION 27-621 FOR ADDITIONAL REQUIREMENTS).<br>– ALTERNATIVE ANTENNA SUPPORT STRUCTURES LOCATED ON SCHOOL, GOVERNMENT-OWNED UTILITY AND OTHER GOVERNMENT SITES. | A | A | A | A | A | A | A | A | A | A | A | A | A |

| TITLES AND DESCRIPTION OF INDUSTRIES<br><br>SR - SPECIAL REVIEW<br>A - ALLOWED | Agricultural - Open Space | Agricultural - Suburban | Residential - 15,000 | Residential - 9,600 | Residential - 8,000 | Residential - 7,000 Restricted | Residential - 7,000 | Residential - 6,000 Restricted | Residential - 6,000 | Residential - 5,000 | Residential Multi-Family | Residential Multi-Family - Restricted | Residential Manufactured Home |
|---|---|---|---|---|---|---|---|---|---|---|---|---|---|
| – ROOF-MOUNTED ANTENNAE LOCATED ON SCHOOL, GOVERNMENT-OWNED UTILITY AND OTHER GOVERNMENT SITES. | A | A | A | A | A | A | A | A | A | A | A | A | A |
| – ANTENNAE CO-LOCATED ON EXISTING OR APPROVED ALTERNATIVE ANTENNA SUPPORT STRUCTURES OR ANTENNA SUPPORT STRUCTURES. | A | A | A | A | A | A | A | A | A | A | A | A | A |
| – ANTENNA SUPPORT STRUCTURES 50 FEET OR LESS IN HEIGHT (SEE ADDITIONAL REQUIREMENTS IN SECTION 27-621). | A | | | | | | | | | | | | |
| – ANTENNA SUPPORT STRUCTURES GREATER THAN 50 FEET IN HEIGHT | SR | | | | | | | | | | | | |
| – BROADCAST ANTENNA OR TOWER FARM | SR | | | | | | | | | | | | |
| CAMPGROUNDS, PUBLIC OR PRIVATE | SR | SR | | | | | | | | | | | |
| CEMETERIES | A | SR | SR | SR | SR | SR | SR | SR | SR | SR | SR | SR | SR |
| CHILD CARE FACILITIES: | | | | | | | | | | | | | |
| – Family day care home | A | A | A | A | A | A | A | A | A | A | A | A | A |
| – Group day care home | A | A | A | A | A | A | A | A | A | A | A | A | A |
| – Day care center | SR | SR | SR | SR | SR | SR | SR | SR | SR | SR | SR | SR | SR |
| CHURCHES AND OTHER PLACES OF WORSHIP, INCLUDING SUNDAY SCHOOL BUILDINGS | SR | SR | SR | SR | SR | SR | SR | SR | SR | SR | SR | SR | SR |
| COMMUNITY RESIDENTIAL FACILITIES SERVING EIGHT (8) OR FEWER PERSONS, PROVIDING CARE ON A 24-HOUR-A-DAY BASIS | A | A | A | A | A | A | A | A | A | A | A | A | A |

| TITLES AND DESCRIPTION OF INDUSTRIES<br><br>SR - SPECIAL REVIEW<br>A - ALLOWED | Agricultural - Open Space | Agricultural - Suburban | Residential - 15,000 | Residential - 9,600 | Residential - 8,000 | Residential - 7,000 Restricted | Residential - 7,000 | Residential - 6,000 Restricted | Residential - 6,000 | Residential - 5,000 | Residential Multi-Family | Residential Multi-Family - Restricted | Residential Manufactured Home |
|---|---|---|---|---|---|---|---|---|---|---|---|---|---|
| COMMUNITY RESIDENTIAL FACILITIES SERVING NINE (9) OR MORE PERSONS | SR | SR | SR | SR | SR | SR | SR | SR | SR | SR | SR | SR | SR |
| COMMUNITY RESIDENTIAL FACILITIES NOT PROVIDING CARE ON A 24-HOUR-A-DAY BASIS | SR | SR | SR | SR | SR | SR | SR | SR | SR | SR | SR | SR | SR |
| COMMERCIAL ANTENNA SUPPORT STRUCTURES: | | | | | | | | | | | | | |
| – ALTERNATIVE ANTENNA SUPPORT STRUCTURES LOCATED ON SCHOOL, GOVERNMENT-OWNED UTILITY AND OTHER GOVERNMENT SITES. | A | A | A | A | A | A | A | A | A | A | A | A | A |
| – ROOF-MOUNTED ANTENNAE LOCATED ON SCHOOL, GOVERNMENT-OWNED UTILITY AND OTHER GOVERNMENT SITES. | A | A | A | A | A | A | A | A | A | A | A | A | A |
| – ANTENNAE CO-LOCATED ON EXISTING OR APPROVED ALTERNATIVE ANTENNA SUPPORT STRUCTURES OR ANTENNA SUPPORT STRUCTURES. | A | A | A | A | A | A | A | A | A | A | A | A | A |
| – ANTENNA SUPPORT STRUCTURES 50 FEET OR LESS IN HEIGHT (SEE ADDITIONAL REQUIREMENTS IN SECTION 27-620). | A | | | | | | | | | | | | |
| – ANTENNA SUPPORT STRUCTURES GREATER THAN 50 FEET IN HEIGHT. | SR | | | | | | | | | | | | |
| – TOWER FARMS. | SR | | | | | | | | | | | | |
| CONVALESCENT NURSING HOMES, RETIREMENT HOMES, ORPHANAGES, AND CHARITABLE INSTITUTIONS | SR | SR | SR | SR | SR | SR | SR | SR | SR | SR | SR | SR | SR |

| TITLES AND DESCRIPTION OF INDUSTRIES<br><br>SR - SPECIAL REVIEW<br>A - ALLOWED | Agricultural - Open Space | Agricultural - Suburban | Residential - 15,000 | Residential - 9,600 | Residential - 8,000 | Residential - 7,000 Restricted | Residential - 7,000 | Residential - 6,000 Restricted | Residential - 6,000 | Residential - 5,000 | Residential Multi-Family | Residential Multi-Family - Restricted | Residential Manufactured Home |
|---|---|---|---|---|---|---|---|---|---|---|---|---|---|
| CONVENTS | SR | SR | SR | SR | SR | | SR | | SR | SR | A | A | SR |
| DWELLINGS: | | | | | | | | | | | | | |
| – Single-family | A | A | A | A | A | A | A | A | A | A | A | A | A |
| – Two-family | | | | | A | | A | | A | A | A | A | |
| – Multiple-family | | | | | | | | | SR | | A | A | |
| – Manufactured Homes | | | | | | | | | | | | | |
| – Class A | A | A | A | | | | | | | | | | A |
| – Class B | A | SR | SR | | | | | | | | | | A |
| – Class C | SR | SR | SR | | | | | | | | | | A |
| – Modular Homes | A | A | A | A | A | A | A | A | A | A | A | A | A |
| – Townhouses (minimum 2,500 square feet) | | | | | SR | | SR | | SR | SR | SR | SR | |
| – Farm Tenant Houses | A | | | | | | | | | | | | |
| EMERGENCY SERVICES, INCLUDING FIRE STATIONS AND AMBULANCE SERVICES | SR | SR | SR | SR | SR | SR | SR | SR | SR | SR | SR | SR | SR |
| EXTRACTIVE INDUSTRIES: | | | | | | | | | | | | | |
| – Excavation of sand and gravel (county) | SR | SR | SR | SR | SR | SR | SR | SR | SR | SR | SR | SR | SR |
| – Excavation of sand and gravel (city) | | | | | | | | | | | | | |
| FRATERNITY/SORORITY HOUSE | | | | | | | | | SR | | A | A | |
| FUR FARMS | SR | | | | | | | | | | | | |
| GRAIN ELEVATORS: | | | | | | | | | | | | | |
| – Commercial | SR | | | | | | | | | | | | |
| – Private | A | | | | | | | | | | | | |
| GREENHOUSES: | | | | | | | | | | | | | |
| – Commercial | A | SR | SR | | | | | | | | | | |
| – Domestic | A | A | A | A | A | A | A | A | A | A | A | A | A |
| GUN AND ARCHERY RANGE: INDOOR AND/OR OUTDOOR | SR | | | | | | | | | | | | |
| HOME OCCUPATIONS | A | A | A | A | A | A | A | A | A | A | A | A | A |

| TITLES AND DESCRIPTION OF INDUSTRIES<br><br>SR - SPECIAL REVIEW<br>A - ALLOWED | Agricultural - Open Space | Agricultural - Suburban | Residential - 15,000 | Residential - 9,600 | Residential - 8,000 | Residential - 7,000 Restricted | Residential - 7,000 | Residential - 6,000 Restricted | Residential - 6,000 | Residential - 5,000 | Residential Multi-Family | Residential Multi-Family - Restricted | Residential Manufactured Home |
|---|---|---|---|---|---|---|---|---|---|---|---|---|---|
| KENNELS:<br>– Commercial<br>– Noncommercial | <br>A<br>A | <br>SR<br>A | <br><br>A | <br><br>A | <br><br>A | <br><br>A | <br><br>A | <br><br>A | <br><br>A | <br><br>A | <br><br>A | <br><br>A | <br><br>A |
| LANDFILLS: RECLAMATION, SANITARY DUMP SITES AND SANITARY INCINERATORS | SR | | | | | | | | | | | | |
| LIBRARIES, MUSEUMS AND ART GALLERIES | SR | SR | SR | SR | SR | SR | SR | SR | SR | SR | SR | SR | SR |
| LIVESTOCK: COMMERCIAL FEEDING YARDS AND AUCTION HOUSES | SR | | | | | | | | | | | | |
| LIVESTOCK AND FOWL *<br>(County Only)<br><br>* See BMCC Section 27-607 for Minimum Area Requirements | A* | A* | A* | A* | | | A* | | | | | | A* |
| LUMBER, PLYWOOD AND SHINGLE MILLS | SR | | | | | | | | | | | | |
| MANUFACTURED HOME PARKS | SR | SR | SR | | | | | | | | | | A |
| PARKING, PUBLIC | SR | SR | SR | SR | SR | SR | SR | SR | SR | SR | SR | SR | SR |
| PIPELINES AND DISTRIBUTION LINES (OIL AND GAS) AND ACCESSORY STRUCTURES | SR | | | | | | | | | | | | |
| PUBLICLY-OWNED OR GOVERNMENT OPERATED BUILDINGS AND USES | SR | SR | SR | SR | SR | SR | SR | SR | SR | SR | SR | SR | SR |
| RECREATION:<br>– Commercial<br>– Noncommercial | <br>SR<br>A | <br>SR<br>A | <br>SR<br>A | <br>SR<br>A | <br>SR<br>A | <br>SR<br>A | <br>SR<br>A | <br>SR<br>A | <br>SR<br>A | <br>SR<br>A | <br>SR<br>A | <br>SR<br>A | <br>SR<br>A |
| REHABILITATIVE CENTERS | SR | SR | SR | SR | SR | SR | SR | SR | SR | SR | SR | SR | SR |

| TITLES AND DESCRIPTION OF INDUSTRIES<br><br>SR - SPECIAL REVIEW<br>A - ALLOWED | Agricultural - Open Space | Agricultural - Suburban | Residential - 15,000 | Residential - 9,600 | Residential - 8,000 | Residential - 7,000 Restricted | Residential - 7,000 | Residential - 6,000 Restricted | Residential - 6,000 | Residential - 5,000 | Residential Multi-Family | Residential Multi-Family - Restricted | Residential Manufactured Home |
|---|---|---|---|---|---|---|---|---|---|---|---|---|---|
| RODEOS AND INDOOR AND/OR OUTDOOR ROPING ARENAS | SR | | | | | | | | | | | | |
| SCHOOLS (PUBLIC OR PRIVATE):<br>– Preschool, elementary, junior or senior high<br>– Colleges and universities<br>– Trade or vocational-technical | SR<br>SR<br>SR | SR<br>SR<br>SR | SR | SR | SR | SR | SR | SR | SR | SR | SR | SR | SR |
| STABLES:<br>– Commercial<br>– Private *<br><br>* See BMCC Section 27-607 for minimum Area Requirements | A<br>A* | SR<br>A* | A* | A* | | | A* | | | | | | A* |
| TRANSMISSION AND DISTRIBUTION LINES (ELECTRIC) AND ACCESSORY STRUCTURES | SR | | | | | | | | | | | | |
| TRAVEL TRAILER PARKS | SR | SR | | | | | | | | | | | |
| UTILITIES (PUBLIC SERVICE INSTALLATIONS):<br>– Station only<br>– Storage yard | A<br>SR | SR | SR | SR | SR | SR | SR | SR | SR | SR | SR | SR | SR |
| VETERINARY CLINICS:<br>– Boarding<br>– Outpatient only | A<br>A | SR<br>SR | | | | | | | | | | | |

## Sec. 27-306. District Regulations: Commercial and Industrial Uses.

| TITLES AND DESCRIPTION OF INDUSTRIES<br><br>SR - SPECIAL REVIEW<br>A - ALLOWED | Residential Professional | Neighborhood Commercial | Community Commercial | Highway Commercial | Central Business District | Controlled Industrial | Heavy Industrial | Public | South 27th Street Corridor |
|---|---|---|---|---|---|---|---|---|---|
| **27** PRINTING, PUBLISHING, AND ALLIED INDUSTRIES: | | | SR | A | A | A | A | | SR |
| – Offices only | A | A | A | A | A | A | A | | A |
| **28** CHEMICALS AND ALLIED PRODUCTS: | | | | | | | A | | |
| – Offices only | A | A | A | A | A | A | A | | A |
| – 2833-Medicinal & Botanical Products | | | | A | | A | A | | |
| – 2834 – Pharmaceutical Preparations | | | | A | | A | A | | |
| **29** PETROLEUM REFINING AND RELATED INDUSTRIES: | | | | | | | | | |
| – Offices only | A | A | A | A | A | A | A | | A |
| – 291 Petroleum refining | | | | | | | SR | | |
| – All others | | | | | | | A | | |
| **30** RUBBER AND MISCELLANEOUS PLASTICS PRODUCTS: | | | | | | SR | SR | | |
| – Offices only | A | A | A | A | A | A | A | | A |
| **31** LEATHER AND LEATHER PRODUCTS: | | | | SR | | A | A | | |
| – Offices only | A | A | A | A | A | A | A | | A |
| **32** STONE, CLAY, GLASS, AND CONCRETE PRODUCTS (EXCEPT BELOW): | | | | | | A | A | | |
| – Offices only | A | A | A | A | A | A | A | | A |
| – 3231, 3269, 3281 Products made from purchased glaze, pottery products, cut stone products | | | | SR | | A | A | | |
| – 324, 325, 327 Hydraulic cement; structural clay products; concrete, gypsum, and plaster products | | | | | | SR | A | | |
| **33** PRIMARY METAL INDUSTRIES (EXCEPT BELOW): | | | | | | SR | A | | |
| – Offices only | A | A | A | A | A | A | A | | A |
| – 332, 336 Foundries | | | | | | | A | | |
| – 3312, 333, 334 Blast furnaces, primary and secondary smelters | | | | | | | SR | | |

| TITLES AND DESCRIPTION OF INDUSTRIES<br><br>SR - SPECIAL REVIEW<br>A - ALLOWED | Residential Professional | Neighborhood Commercial | Community Commercial | Highway Commercial | Central Business District | Controlled Industrial | Heavy Industrial | Public | South 27th Street Corridor |
|---|---|---|---|---|---|---|---|---|---|
| **34** FABRICATED METAL PRODUCTS, EXCEPT MACHINERY AND TRANSPORTATION EQUIPMENT (EXCEPT BELOW): | | | | | | SR | A | | |
| – Offices only | A | A | A | A | A | A | A | | A |
| – 348 Ordnance and accessories, except vehicles and guided missiles | | | | | | | SR | | |
| **35** INDUSTRIAL AND COMMERCIAL MACHINERY AND COMPUTER EQUIPMENT: | | | | | | SR | A | | |
| – Offices only | A | A | A | A | A | A | A | | A |
| **36** ELECTRONIC AND OTHER ELECTRICAL EQUIPMENT AND COMPONENTS, EXCEPT COMPUTER EQUIPMENT: | | | | | | SR | A | | |
| – Offices only | A | A | A | A | A | A | A | | A |
| **37** TRANSPORTATION EQUIPMENT: | | | | | | | A | | |
| – Offices only | A | A | A | A | A | A | A | | A |
| **38** MEASURING, ANALYZING, AND CONTROLLING INSTRUMENTS; PHOTOGRAPHIC, MEDICAL, AND OPTICAL GOODS; WATCHES AND CLOCKS (3,000 SF GFA MAX): | | | | | | A | A | | A |
| – Over 3,000 SF GFA MAX | | | | | | A | A | | SR |
| – Offices only | A | A | A | A | A | A | A | | A |
| – 3861 Photographic equipment and supplies | | | | | | SR | A | | |

| TITLES AND DESCRIPTION OF INDUSTRIES<br><br>SR - SPECIAL REVIEW<br>A - ALLOWED | Residential Professional | Neighborhood Commercial | Community Commercial | Highway Commercial | Central Business District | Controlled Industrial | Heavy Industrial | Public | South 27th Street Corridor |
|---|---|---|---|---|---|---|---|---|---|
| **39** MISCELLANEOUS MANUFACTURING INDUSTRIES: | | | | | | | | | |
| – Offices only | A | A | A | A | A | A | A | | A |
| – 391, 393, 394 Jewelry, silverware, plated ware; musical instruments; dolls, toys, games, sporting, and athletic goods (3,000 SF GFA MAX) | | | | A | | A | A | | A |
| – Over 3,000 SF GFA MAX | | | | A | | A | A | | SR |
| – 395, 396, 399 Pens, pencils, and artists materials; costume jewelry and novelties; miscellaneous manufacturing industries (3,000 SF GFA MAX) | | | | SR | | A | A | | A |
| – Over 3,000 SF GFA MAX | | | | SR | | A | A | | SR |
| **DIVISION E - TRANSPORTATION, COMMUNICATIONS, ELECTRIC, GAS, AND SANITARY SEWER** | | | | | | | | | |
| **40** RAILROAD TRANSPORTATION: | | | | | | | | | |
| – Offices only | A | A | A | A | A | A | A | | A |
| – Switching yards | | | | | | | A | | |
| – Passenger and freight terminals | | | | | A | A | A | | |
| **41** LOCAL AND SUBURBAN TRANSIT AND INTERURBAN HIGHWAY PASSENGER TRANSPORTATION: | | | | A | A | A | A | A | |
| – Offices only | A | A | A | A | A | A | A | A | A |
| – 4173 Bus terminal operation only, without maintenance facilities | | | | A | A | A | A | A | A |

| TITLES AND DESCRIPTION OF INDUSTRIES<br><br>SR - SPECIAL REVIEW<br>A - ALLOWED | Residential Professional | Neighborhood Commercial | Community Commercial | Highway Commercial | Central Business District | Controlled Industrial | Heavy Industrial | Public | South 27th Street Corridor |
|---|---|---|---|---|---|---|---|---|---|
| **42** MOTOR FREIGHT TRANSPORTATION AND WAREHOUSING: | | | | | | | | | |
| – Offices only | A | A | A | A | A | A | A | | A |
| – 421, 423 Trucking terminal and maintenance facilities (except below): | | | | A | | A | A | | |
| – 4215 Courier services, except by air (without truck terminal facilities) | | | | A | A | A | A | | |
| – 422 Public warehousing (except below): | | | | | | A | A | | |
| – 4225 General warehousing and storage | | | A | A | | A | A | | SR |
| – 4226 Special warehouse and storage | | | | | | | A | | |
| **43** U.S. POSTAL SERVICE: | | | | | | | | | |
| – Without truck terminal facilities | A | A | A | A | A | A | A | A | A |
| – With truck terminal facilities | | | | A | | A | A | A | |
| **44** WATER TRANSPORTATION: | A | A | A | A | A | A | A | | A |
| – Offices only | | | | | | | | | |
| **45** TRANSPORTATION BY AIR: | | | | | | | | A | |
| – Offices only | A | A | A | A | A | A | A | A | A |
| – 4513 Air courier services (without truck terminal facilities) | | | | A | A | A | A | A | |
| **46** PIPELINES, EXCEPT NATURAL GAS: | SR | SR | SR | SR | SR | SR | SR | SR | SR |
| – Offices only | A | A | A | A | A | A | A | | A |
| **47** TRANSPORTATION SERVICES: | | | | | | | | | |
| – Offices only | A | A | A | A | A | A | A | | A |
| – Warehouses, terminals | | | | A | | A | A | | |

| TITLES AND DESCRIPTION OF INDUSTRIES<br><br>SR - SPECIAL REVIEW<br>A - ALLOWED | Residential Professional | Neighborhood Commercial | Community Commercial | Highway Commercial | Central Business District | Controlled Industrial | Heavy Industrial | Public | South 27th Street Corridor |
|---|---|---|---|---|---|---|---|---|---|
| **48** Communications | | | | | | | | | |
| – Offices only | A | A | A | A | A | A | A | A | A |
| Amateur Radio Antenna Support Structures: | | | | | | | | | |
| – 100 feet or less in height (See Section 27-619 for additional requirements) | A | A | A | A | A | A | A | A | A |
| – Greater than 100 feet in height | SR | SR | SR | SR | SR | SR | A | SR | SR |
| Broadcasting (Radio and Television) Services: | | | | | | | | | |
| – Stations and studios | SR | SR | A | A | A | A | A | A | A |
| – Antenna support structures that meet the height restrictions for building in BMCC Section 37-309. | SR | SR | A | A | A | A | A | A | A |
| – Antenna support structures exceeding the maximum height for buildings in BMCC, Section 27-309, or exceed 50 feet in height whichever is less. | SR | SR | SR | SR | SR | SR | A | SR | SR |
| – Broadcast antenna or tower farms | SR | SR | SR | SR | | SR | A | SR | |
| Commercial Antenna Support Structures: | | | | | | | | | |
| – Alternative antenna support structures. | A | A | A | A | A | A | A | A | A |
| – Antenna support structures located on school, government-owned utility or other government sites. | A | A | A | A | A | A | A | A | A |
| – Antennae co-located on existing or approved alternative antenna support structures or antenna support structures. | A | A | A | A | A | A | A | A | A |

| TITLES AND DESCRIPTION OF INDUSTRIES<br><br>SR - SPECIAL REVIEW<br>A - ALLOWED | Residential Professional | Neighborhood Commercial | Community Commercial | Highway Commercial | Central Business District | Controlled Industrial | Heavy Industrial | Public | South 27th Street Corridor |
|---|---|---|---|---|---|---|---|---|---|
| – Roof-mounted antenna | SR | SR | A | A | A | A | A | A | A |
| – Antenna support structures 50 feet or less in height (see additional requirements in Section 27-620). | SR | SR | A | A | A | A | A | A | A |
| – Antenna support structures greater than 50 feet in height. | SR | SR | SR | SR | SR | SR | A | SR | SR |
| – Tower farms | | | SR | SR | | SR | A | SR | |
| – Dishes over 12' in Diameter | SR | SR | A | A | A | A | A | SR | SR |
| **49** ELECTRIC, GAS, AND SANITARY SERVICES: | | | | | | | | | |
| – Offices only | A | A | A | A | A | A | A | | A |
| – Municipal water supply (4941) or sewerage (4952) treatment facilities | | | | | | | A | A | |
| – 4953 Refuse systems* | | | | | | | SR | | |
| – Sanitary landfills | | | | | | | | SR | |
| – Transmission and distribution, electric and gas | SR | SR | SR | SR | SR | SR | SR | SR | SR |
| – Production, manufacture and generation, electric or gas | | | | | | SR | SR | | |
| – All others this group | | | | | | SR | SR | | |
| * See BMCC Sec. 27-605 Hazardous Waste Facilities | | | | | | | | | |
| **DIVISION F - WHOLESALE TRADE** | | | | | | | | | |
| **50** WHOLESALE TRADE - DURABLE GOODS: | | | | | | | | | |
| – Offices only | A | A | A | A | A | A | A | | A |
| – Warehouses with no outside storage (3,000 SF GFA MAX) | | | | A | | A | A | | A |
| – Over 3,000 SF GFA MAX | | | | A | | A | A | | SR |
| – Outside storage | | | | SR | | A | A | | |
| – 5093 Scrap and waste materials (auto wrecking) | | | | | | SR | SR | | |

| TITLES AND DESCRIPTION OF INDUSTRIES<br><br>SR - SPECIAL REVIEW<br>A - ALLOWED | Residential Professional | Neighborhood Commercial | Community Commercial | Highway Commercial | Central Business District | Controlled Industrial | Heavy Industrial | Public | South 27th Street Corridor |
|---|---|---|---|---|---|---|---|---|---|
| **51** WHOLESALE TRADE - NONDURABLE GOODS: | | | | | | | | | |
| – Offices only | A | A | A | A | A | A | A | | A |
| – 511, 512, 513 Paper, drugs and apparel | | | | A | | A | A | | |
| – 514, 518 Groceries; beer, wine and distilled beverages | | | | SR | | A | A | | |
| – 515 Farm product raw materials (except below): | | | | | | A | A | | |
| – 5154 Livestock auctions | | | | | | | SR | | |
| – 516 Chemicals and allied products | | | | | | SR | A | | |
| – 517 Petroleum and petroleum products | | | | | | | A | | |
| – 518 Beer, wine, and distilled alcoholic beverages | | | | | | SR | A | | |
| – 5191, 5198 Farm supplies; paints, varnishes, and supplies | | | | | | A | A | | |
| – 5192, 5193, 5194, 5199 Books, periodicals, and newspapers; flowers, nursery stock and florists' supplies; tobacco and tobacco products; non-durables not elsewhere classified | | | | SR | | A | A | | |

| TITLES AND DESCRIPTION OF INDUSTRIES<br><br>SR - SPECIAL REVIEW<br>A - ALLOWED | Residential Professional | Neighborhood Commercial | Community Commercial | Highway Commercial | Central Business District | Controlled Industrial | Heavy Industrial | Public | South 27th Street Corridor |
|---|---|---|---|---|---|---|---|---|---|
| **DIVISION G - RETAIL TRADE**<br><br>* Under 3,000 square feet gross floor area (GFA). A special review is required if over 3,000 square feet GFA. No outside storage and no warehousing of storage in excess of twenty-five (25) percent of total GFA. | | | | | | | | | |
| **52** BUILDING MATERIALS, HARDWARE, GARDEN SUPPLY, AND MOBILE HOME DEALERS: | | | | | | | | | |
| – 521 Lumber and other building materials stores | | | SR | A | | A | A | | SR |
| – 523, 525 Paint, glass and wallpaper; hardware stores | | A* | A | A | A | A | A | | A |
| – 526 Nurseries, lawn and garden supply stores | | | A | A | A | A | A | | A |
| – 527 Mobile home dealers (manufactured homes) | | | | A | | A | A | | |
| **53** GENERAL MERCHANDISE STORES | | A* | A | A | A | A | A | | A |
| **54** FOOD STORES | | A* | A | A | A | A | A | | A |
| – Convenience store with gas pump islands | | A* | A | A | A | A | A | | A |
| **55** AUTOMOTIVE DEALERS AND GASOLINE SERVICE STATIONS (EXCEPT BELOW): | | | A | A | A | A | A | | A |
| – 553 Auto supply | | A* | A | A | A | A | A | | A |
| – 554 Gasoline service stations | | | | | | | | | |
| – Convenience store | | A* | A | A | A | A | A | | A |
| – Service station | | SR | A | A | A | A | A | | A |
| – Accessory car wash with above two uses | | SR | A | A | A | A | A | | A |
| – Truck stop | | | | A | | A | A | | |
| – 556 Recreational vehicle dealers | | | A | A | | A | A | | A |
| **56** APPAREL AND ACCESSORY STORES | | A* | A | A | A | A | A | | A |

| TITLES AND DESCRIPTION OF INDUSTRIES<br><br>SR - SPECIAL REVIEW<br>A - ALLOWED | Residential Professional | Neighborhood Commercial | Community Commercial | Highway Commercial | Central Business District | Controlled Industrial | Heavy Industrial | Public | South 27th Street Corridor |
|---|---|---|---|---|---|---|---|---|---|
| **57** HOME FURNITURE, FURNISHINGS, AND EQUIPMENT STORES | | A* | A | A | A | A | A | | A |
| **58** EATING AND DRINKING PLACES (SEE BMCC SECTION 27-612) | | | | | | | | | |
| – Without the sale of alcoholic beverages | | A | A | A | A | A | A | | A |
| – With the sale of beer and wine only for on-premise consumption, without gaming | | | SR | SR | SR | SR | SR | | SR |
| – With the sale of beer and wine only for on-premise consumption, with gaming | | | SR | SR | SR | SR | SR | | SR |
| – With the sale of all alcoholic beverages for on-premise consumption, with gaming | | | SR | SR | SR | SR | SR | | SR |
| * Establishments with drive-in service shall comply with BMCC Section 27-612. | | | | | | | | | |
| **59** MISCELLANEOUS RETAIL (STRICTLY CARRYOUT), (EXCEPT BELOW): | | A* | A | A | A | A | A | | A |
| – 598 Fuel dealers | | | A | A | A | A | A | | A |
| * Fireworks stands shall comply with BMCC Section 27-614. | | | | | | | | | |
| ** Sexually oriented business, as classified and defined in BMCC Section 27-611. | | | | | | | | | |
| **DIVISION H - FINANCE, INSURANCE, AND REAL ESTATE (See BMCC Section 27-612).** | | | | | | | | | |
| **60** DEPOSITORY INSTITUTIONS | A | A | A | A | A | A | A | | A |
| **61** NONDEPOSITORY CREDIT INSTITUTIONS | A | A | A | A | A | A | A | | A |
| **62** SECURITY AND COMMODITY BROKERS, DEALERS, EXCHANGES, AND SERVICES | A | A | A | A | A | A | A | | A |

| TITLES AND DESCRIPTION OF INDUSTRIES<br><br>SR - SPECIAL REVIEW<br>A - ALLOWED | Residential Professional | Neighborhood Commercial | Community Commercial | Highway Commercial | Central Business District | Controlled Industrial | Heavy Industrial | Public | South 27th Street Corridor |
|---|---|---|---|---|---|---|---|---|---|
| **63** INSURANCE CARRIERS | A | A | A | A | A | A | A | | A |
| **64** INSURANCE AGENTS, BROKERS, AND SERVICE | A | A | A | A | A | A | A | | A |
| **65** REAL ESTATE (EXCEPT BELOW): | A | A | A | A | A | A | A | | A |
| – 6515 Operators of residential mobile home sites | | | | | | | | | |
| – 6553 Cemetery subdividers and developers | | | | | | | | A | |
| **66** COMBINATIONS OF REAL ESTATE, INSURANCE, LOANS, OR LAW OFFICES | A | A | A | A | A | A | A | | A |
| **67** HOLDING AND OTHER INVESTMENT OFFICES | A | A | A | A | A | A | A | | A |
| **DIVISION I - SERVICES** | | | | | | | | | |
| **70** HOTELS, ROOMING HOUSES, CAMPS AND OTHER LODGING PLACES: | | | | | | | | | |
| – 701 Hotels and motels | | | A | A | A | A | A | | A |
| – 702, 704 Rooming, boarding houses; organization hotels and lodging houses, on a membership basis | | A | A | A | A | A | A | | A |
| – 703 Camps and recreational vehicle parks | | | SR | A | | A | A | SR | |
| **72** PERSONAL SERVICES: | | | | | | | | | |
| – 7211, 7213, 7217, 7218 Power laundries, family and commercial; linen supply; carpet and upholstery cleaning; industrial launderers | | | | SR | SR | A | A | | |
| – 7212, 7216, 7219 Garment pressing, and agents for laundries and drycleaning; drycleaning plants, except rug cleaning; laundry and garment services, not elsewhere classified; (3,000 SF GFA MAX) | SR | A | A | A | A | A | A | | A |
| – Over 3,000 SF GFA MAX | | SR | A | A | A | A | A | | SR |

| TITLES AND DESCRIPTION OF INDUSTRIES<br><br>SR - SPECIAL REVIEW<br>A - ALLOWED | Residential Professional | Neighborhood Commercial | Community Commercial | Highway Commercial | Central Business District | Controlled Industrial | Heavy Industrial | Public | South 27th Street Corridor |
|---|---|---|---|---|---|---|---|---|---|
| – 7215 Coin-operated laundries and drycleaning | | A* | A | A | A | A | A | | A |
| – 722 Photographic studios | A | A | A | A | A | A | A | | A |
| – 723, 724 Beauty and barber shops | A | A | A | A | A | A | A | | A |
| – 725 Shoe repair shops and shoeshine parlors | | A | A | A | A | A | A | | A |
| – 726 Funeral service and crematories | A | A | A | A | A | A | A | A | A |
| – 729 Miscellaneous personal services, except 7291 | | | A | A | A | A | A | | A |
| – Under 1,500 square feet GFA | | A | A | A | A | A | A | | A |
| – 7291 Tax return preparation services | A | | A | A | A | A | A | | A |
| – Under 1,500 square feet GFA | A | A | A | A | A | A | A | | A |
| **73** BUSINESS SERVICES: | | | | | | | | | |
| – Offices only | A | A | A | A | A | A | A | | A |
| – With retail sales | | A* | A | A | A | A | A | | A |
| – With use of vehicles of two tons or over GVW | | | | A | | A | A | | |
| – Without inside storage over 3,000 square feet GFA or outside storage | | | | A | | A | A | | |
| – With research, testing, and development laboratories (See also manufacturing industries) | | | SR | A | | A | A | | SR |
| **75** AUTOMOTIVE REPAIR, SERVICES, AND PARKING (EXCEPT BELOW): | | | A | A | A | A | A | | A |
| – 7513, 7519 Truck rental and leasing; utility trailer and recreational vehicle rental | | | A | A | | A | A | | SR |
| – 752 Automobile parking | A | A | A | A | A | A | A | | A |
| – 7542 Car washes | | SR | SR | A | A | A | A | | SR |
| **76** MISCELLANEOUS REPAIR SERVICES (EXCEPT BELOW): | | | A | A | A | A | A | | A |
| – 763 Watch, clock, and jewelry repair | | A | A | A | A | A | A | | A |

| TITLES AND DESCRIPTION OF INDUSTRIES<br><br>SR - SPECIAL REVIEW<br>A - ALLOWED | Residential Professional | Neighborhood Commercial | Community Commercial | Highway Commercial | Central Business District | Controlled Industrial | Heavy Industrial | Public | South 27th Street Corridor |
|---|---|---|---|---|---|---|---|---|---|
| **78** MOTION PICTURES (EXCEPT BELOW): | | | A | A | A | A | A | | A |
| – 7833 Drive-in motion picture theaters | | | | SR | | SR | | | |
| **79** AMUSEMENT AND RECREATION SERVICES*: | | | | | | | | | |
| – 791, Dance studios, schools, and halls | A | A | A | A | A | A | A | | A |
| – 792 theatrical producers, bands, orchestras, and entertainers | | A | A | A | A | A | A | | A |
| – 793, 799 Bowling centers; miscellaneous amusement and recreation services, and gambling operations* (except below): | | | A | A | A | A | A | | A |
| – Public swimming pools | | | | | | | | A | |
| – Riding stables | | | | | | SR | SR | | |
| – Martial arts instruction | A | A | A | A | A | A | A | | A |
| – 7992 Public golf courses | | | | | | | | A | |
| – 794 Commercial sports | | | SR | A | SR | A | A | A | SR |
| * See BMCC Section 27-612. | | | | | | | | | |
| **80** HEALTH SERVICES (EXCEPT BELOW): | A | A | A | A | A | A | A | A | A |
| – Establishments where retail sales constitutes more than an accessory use | | A | A | A | A | A | A | | A |
| **81** LEGAL SERVICES | A | A | A | A | A | A | A | | A |
| **82** EDUCATIONAL SERVICES (EXCEPT BELOW): | | A | A | A | A | A | A | A | A |
| – 821 Elementary and secondary schools | A | A | A | A | A | A | A | A | A |
| – 822 Colleges, universities, professional schools, and junior colleges | SR | SR | SR | SR | SR | SR | SR | A | SR |
| **83** SOCIAL SERVICES (EXCEPT BELOW): | A | A | A | A | A | A | A | A | A |
| – 833 Job training and vocational rehabilitation services | SR | SR | A | A | A | A | A | A | A |
| – | | | | | | | | | |

| TITLES AND DESCRIPTION OF INDUSTRIES<br><br>SR - SPECIAL REVIEW<br>A - ALLOWED | Residential Professional | Neighborhood Commercial | Community Commercial | Highway Commercial | Central Business District | Controlled Industrial | Heavy Industrial | Public | South 27th Street Corridor |
|---|---|---|---|---|---|---|---|---|---|
| **84** MUSEUMS, ART GALLERIES, AND BOTANICAL AND ZOOLOGICAL GARDENS: | | | | | | | | | |
| – 841 Museums and art galleries | | A | A | A | A | A | A | A | A |
| – 842 Arboreta and botanical or zoological gardens | | | | | | | | A | SR |
| **86** MEMBERSHIP ORGANIZATIONS (EXCEPT BELOW): | A | A | A | A | A | A | A | | A |
| – 864 Civic, social, and fraternal associations* | | | A | A | A | A | A | | A |
| * See also BMCC Section 27-612. | | | | | | | | | |
| **87** ENGINEERING, ACCOUNTING, RESEARCH, MANAGEMENT, AND RELATED SERVICES (EXCEPT BELOW): | | | A | A | A | A | A | | A |
| – 871, 872 Engineering, architectural and surveying services; accounting, auditing and bookkeeping services | A | A | A | A | A | A | | | A |
| – 8731 Commercial physical and biological research | | | SR | A | A | A | A | | A |
| – 8733 Noncommercial research organizations | | | SR | A | A | A | A | | A |
| – 8734 Testing laboratories | | | SR | A | A | A | A | | A |
| – 8744 Facilities support management services | | | | | | SR | | SR | SR |
| **88** PRIVATE HOUSEHOLDS | A | A | A | A | A | | | | SR |
| **89** SERVICES, NOT ELSEWHERE CLASSIFIED | A | A | A | A | A | A | A | A | A |
| **DIVISION J - PUBLIC ADMINISTRATION** | | | | | | | | | |
| **91** EXECUTIVE, LEGISLATIVE, AND GENERAL GOVERNMENT, EXCEPT FINANCE | A | A | A | A | A | A | A | A | A |
| **92** JUSTICE, PUBLIC ORDER, AND SAFETY (EXCEPT BELOW): | A | A | A | A | A | A | A | A | A |
| – 9223 Correctional institutions | | | | | | SR | | SR | SR |
| **93** PUBLIC FINANCE, TAXATION, AND MONETARY POLICY | A | A | A | A | A | A | A | A | A |

| TITLES AND DESCRIPTION OF INDUSTRIES<br><br>SR - SPECIAL REVIEW<br>A – ALLOWED | Residential Professional | Neighborhood Commercial | Community Commercial | Highway Commercial | Central Business District | Controlled Industrial | Heavy Industrial | Public | South 27th Street Corridor |
|---|---|---|---|---|---|---|---|---|---|
| **94** ADMINISTRATION OF HUMAN RESOURCE PROGRAMS | A | A | A | A | A | A | A | A | A |
| **95** ADMINISTRATION OF ENVIRONMENTAL QUALITY AND HOUSING PROGRAMS | A | A | A | A | A | A | A | A | A |
| **96** ADMINISTRATION OF ECONOMIC PROGRAMS | A | A | A | A | A | A | A | A | A |
| **97** NATIONAL SECURITY AND INTERNATIONAL AFFAIRS | A | A | A | A | A | A | A | A | A |
| **DIVISION K – NONCLASSIFIABLE ESTABLISHMENTS**<br><br>**99** NONCLASSIFIABLE ESTABLISHMENTS: THE ZONING DISTRICT AND REQUIREMENTS OF THESE ESTABLISHMENTS WILL BE DETERMINED BY THE PLANNING DIRECTOR | | | | | | | | | |
| DWELLINGS | | | | | | | | | |
| – SINGLE-FAMILY | A | A | A | A | A | SR | | | |
| – TWO-FAMILY | | A | A | A | A | | | | |
| – MULTIPLE-FAMILY | | A | A | A | A | | | | SR |
| – MODULAR HOME | A | A | A | A | A | SR | | | SR |
| – ROWHOUSE/TOWNHOUSE | | SR | SR | SR | SR | | | | SR |

## SEC. 27-307. ADOPTION OF STANDARD INDUSTRIAL CLASSIFICATION MANUAL, 1987.

There is adopted by the City Council and Board of County Commissioners for the purpose of classifying the industries set forth in BMCC Section 27-306, the whole 1987 Edition of the Standard Industrial Classification Manual, published by the Executive Office of the President, Office of Management and Budget, of which manual one copy is now filed in the offices of the City Clerk and the County Clerk and Recorder, and the same is adopted and incorporated as fully as if set out at length in this Chapter, and from the date on which this Resolution/Ordinance is adopted said manual shall take effect.

## SEC. 27-308. AREA, YARD AND HEIGHT REQUIREMENTS – RESIDENTIAL

| ZONING REQUIREMENTS | ZONING CLASSIFICATION DISTRICTS | | | | | | | | | | | | |
|---|---|---|---|---|---|---|---|---|---|---|---|---|---|
| | Agricultural-Open Space | Agricultural-Suburban | Residential-15,000 | Residential-9,600 | Residential-8,000 | Residential-7,000 Restricted | Residential-7,000 | Residential-6,000 Restricted | Residential-6,000 | Residential-5,000 | Residential Multi-Family | Residential Multi-Family – Restricted | Residential Manufactured Home |
| MINIMUM LOT AREA PER DWELLING UNIT: (a) (b) (c) | | | | | | | | | | | | | |
| One Unit | 10A | 1A | 15,000 | 9,600 | 8,000 | 7,000 | 7,000 | 6,000 | 6,000 | 5,000 | 6,000 | | 6,000 |
| Two Units | | | | | 10,000 | | 9,600 | | 7,000 | 8,000 | 7,000 | | |
| Three Units | | | | | | | | | *8,500* | | 8,500 | | |
| Four Units | | | | | | | | | *10,000* | | 10,000 | | |
| Five Units | | | | | | | | | *11,500* | | 11,500 | | |
| Six Units | | | | | | | | | *13,000* | | 13,000 | | |
| Seven Units | | | | | | | | | *14,500* | | 14,500 | | |
| Eight Units | | | | | | | | | *16,000* | | 16,000 | | |
| Nine Units | | | | | | | | | *17,500* | | | | |
| Ten Units | | | | | | | | | *19,000* | | 400 each add. unit | 1,500 each add. unit | |
| MINIMUM YARD REQUIREMENTS: (d) (e) | | | | | | | | | | | | | |
| Front (f)(g) | 35 | 25 | 25 | 20 | 20 | 20 | 20 | 15 | 15 | 15 | 15 | | 20 |
| Side (h) (i) (j) (k) | 15 | 10 | 10 | 5 | 5 | 5 | 5 | 5 | 5 | 5 | 5 | | 8 |
| Side Adjacent to Street (l) | 35 | 25 | 25 | 10 | 10 | 10 | 10 | 10 | 10 | 10 | 10 | | 10 |
| Rear | 35 | 25 | 25 | 20 | 20 | 20 | 20 | 20 | 20 | 20 | 15 | | 20 |
| MAXIMUM HEIGHT (m) (n) | 34 | 34 | 34 | 34 | 34 | 34 | 34 | 34 | 34 | 34 | N/A | 40 | 34 |
| MAXIMUM LOT COVERAGE IN PERCENT | 15 | 25 | 30 | 30 | 30 | 30 | 30 | 40 | 40 | 40 | 55 | | 30 |

## SEC. 27-308. AREA, YARD AND HEIGHT REQUIREMENTS – RESIDENTIAL

(a) In the A-1 & A-S districts, minimum lot area figures are in Acres. All other minimum lot area figures denote square footage.

(b) The above requirements are applicable to all structures located on a single lot. For building groups see BMCC Section 27-310(B).

(c) In the Residential-6,000 zone, three-plexes up through ten-plexes up through ten-plexes require Special Review approval, see BMCC Section 27-1503 or 27-1509.

(d) For arterial setback and watercourse setback requirements, See BMCC Sections 27-602 and 27-616, respectively.

(e) For yard setbacks on corner lots, refer to definitions of lot frontage and yard (side) in BMCC Section 27-201.

(f) Block frontages which have buildings constructed prior to the effective date of this Resolution/Ordinance shall have a minimum twenty (20) foot front setback for all districts.

(g) Garages and carports that have their approach from a street shall be setback a minimum of twenty (20) feet.

(h) Required side yards shall be increased to eight (8) feet in distance from the nearest second story portion of the building, plus one (1) foot for each story in excess of two (2).

(i) Townhouses are exempt from the side yard requirements in the Residential-5,000, Residential-6,000, Residential-7,000, Residential-8,000, RMF-R and RMF zoning districts. In addition, townhouses require Special Review approval, as delineated in BMCC Section 27-1503 or 27-1509.

(j) In the Residential-5,000 district, if no alley exists as a secondary means of access, one (1) side yard shall be increased to ten (10) feet.

(k) In the Residential Manufactured Home district, a site built structure complying with the CABO One and Two Family Dwelling code, may be setback a minimum of five (5) feet from the side property line, unless the structure contains two (2) or more stories.

(l) Front yard setbacks as required in the district shall be provided on side streets when a side street frontage exceeds one hundred and fifty (150) feet.

(m) In the A-1 district, maximum height restrictions apply to buildings designed and constructed for human occupancy.

(n) Where there is a change in the adjacent grade of three (3) feet or more the maximum height will be increased one (1) foot for each two (2) feet of grade change.

**NOTE:**

- All height and setback requirements denote feet.
- For height exceptions, see BMCC Section 27-310(F).
- For permitted projections, see BMCC Section 27-310(G)
- For setbacks for detached accessory structures, see BMCC Section 27-310(I)
- N/A = Not Applicable

## ARTICLE 27-300 ZONING DISTRICTS AND OFFICIAL MAP

### SEC. 27-309. AREA, YARD AND HEIGHT REQUIREMENTS – COMMERCIAL AND INDUSTRIAL

| | ZONING CLASSIFICATION DISTRICTS | | | | | | | | |
|---|---|---|---|---|---|---|---|---|---|
| **ZONING REQUIREMENTS** | Residential Professional | Neighborhood Commercial | Community Commercial | Highway Commercial | Central Business District | Controlled Industrial | Heavy Industrial | Public | 27th Street Corridor |
| MINIMUM LOT AREA REQUIREMENT IN SQUARE FEET: (a) | 10,000 | N/A | N/A | N/A | N/A | N/A | N/A | N/A | N/A |
| MINIMUM YARD REQUIREMENTS: (a) (b) | | | | | | | | | |
| Front | 20 | 20 | 20 | 20 | N/A | 20 | 20 | 20 | (d) |
| Side (c) | 10 | 0 | 0 | 0 | N/A | 0 | 0 | 0 | (d) |
| Side Adjacent to Street | 10 | 10 | 10 | 10 | N/A | 10 | 10 | 10 | (d) |
| Rear (c) | 0 | 0 | 0 | 0 | N/A | 0 | 0 | 0 | (d) |
| MAXIMUM HEIGHT | 34 | 34 | 45 | 45 | N/A | 70 | N/A | N/A | (d) |
| MAXIMUM LOT COVERAGE IN PERCENT (a) | 50 | 50 | 50 | 75 | N/A | 75 | 75 | 50 | 50 |

(a) For minimum lot size, yard and lot coverage requirements for residential dwellings in Commercial or Industrial zones, see BMCC Section 27-310.
(b) For arterial setback and watercourse setback requirements, see BMCC Sections 27-602 and 27-616, respectively.
(c) Side and rear setbacks shall be increased to fifteen (15) feet when contiguous to residentially zoned property.
(d) Minimum yard requirements and maximum height for property located in the South 27th Street Corridor Zoning District are located in BMCC Sections 27-810 and 27-811, respectively.

NOTE:

- All height and setback requirements denote feet; all minimum lot area figures denote square footage.
- For height exceptions, see BMCC Section 27-310(F).
- For permitted projections, see BMCC Section 27-310(G).
- N/A = Not Applicable.

## SEC. 27-310. SUPPLEMENTAL AREA, YARD AND HEIGHT RESTRICTIONS.

The following requirements provide exceptions or qualify and supplement the specific district regulations set forth in this part. Planned developments shall be governed by BMCC Section 27-1301, et seq.

(a) **Access for Buildings**. All buildings and structures shall have vehicular access to a minimum width public street or an approved private street. Where the provision of the zoning code on this matter is more restrictive than the building code, then the zoning code restrictions shall be applied. A street shall provide the primary means of pedestrian access for any dwelling unit. Alleys, where they exist, shall provide only a secondary means of access.

(b) **Building Groups**. In any residential or agricultural district, more than one (1) principal structure housing a permitted use may be located on a single lot or combination of lots provided that:

(1) Area requirements are met for each structure as though it were on an individual lot;

(2) A minimum of ten (10) feet is maintained between principal structures;

(3) Side yard setbacks are provided between adjacent properties as required in the district;

(4) Principal structures are setback from alleys a minimum of twenty (20) feet; and

(5) Front yard setbacks as required in the district are provided on side streets when a side street frontage exceeds one hundred and fifty (150) feet.

(c) **Division of Lots**. No recorded lot or combination of lots shall be divided into smaller lots unless such division results in the creation of lots which conform to all of the applicable regulations of the zoning district in which the property is located.

(d) **Lot Sizes**. Yards or lots created after the effective date of this resolution/ordinance shall conform to all of the applicable requirements of the zoning district in which the property is located. In such case as no public water and/or sewer services are available, lot sizes shall also meet the minimum requirements of the Montana Department of Environmental Quality.

(e) **Dwellings in Commercial/Industrial Zones**.

(1) In the Residential Professional, Neighborhood Commercial, Community Commercial, Highway Commercial, South 27th Street Corridor and Controlled Industrial zones: Lot area, yard, and lot coverage requirements for dwelling units shall be the same as those in the RMF-R district.

(2) In the Central Business District zone: Lot area, yard, height, and lot coverage requirements for dwelling units shall not be applicable.

(f) **Height Exceptions**. The following requirements supplement those specific district regulations set forth in BMCC Sections 27-308 and 27-309:

(1) The height limitations shall not apply to spires, belfries, cupolas, antennas, water towers or tanks, chimneys or smokestacks, power transmission lines, cooling or elevator towers or similar and necessary appurtenances not used for human occupancy.

(2) Churches, schools, hospitals, nursing or retirement homes, or public buildings may exceed the height limitations of the district if the minimum depth of the front, side and rear yard setbacks are increased two (2) feet for every one (1) foot by which the structure exceeds the height limitation of the district. This allowed height shall not exceed two (2) times the allowed height in the zoning district in which it is located, without approval through the Variance procedure, as described in BMCC Sections 27-1506 (City) and 27-1511 (County).

(3) The maximum building height may be increased by up to 10% in all zoning districts when the majority of the roof pitch is 7:12 or steeper.

(g) **Permitted Projections**.

(1) Residential Districts: The following projections shall be permitted in required setbacks in residential districts:

a. Fireplaces and bay windows not to exceed two (2) feet;

b. Roof overhangs, eaves, gutters, cornices or other architectural features not to exceed two (2) feet;

c. Open exterior stairways or decks not to exceed two (2) feet in side yards, four (4) feet in front yards, nor eight (8) feet in the rear yards;

d. Covered unenclosed porches over front stoops or walkways not to exceed four (4) feet;

e. The above projections are not permitted if they protrude into or hang over public right-of-way.

(2) Commercial and Industrial Districts: The following projections shall be permitted in required setbacks in commercial and industrial districts:

a. Roof overhangs, eaves, gutters, cornices or other architectural features not to exceed two (2) feet;

b. Canopies not to exceed four (4) feet. For the purposes of this subsection, "canopies" are defined as covers that are solely attached to and supported by the structure on which it is attached to and which can be removed without destroying any part of that supporting structure.

(3) Ramps that provide accessibility.

(4) Exception. The above projections are not permitted if they protrude into or hang over public right-of-way.

(h) **Required Yards**. No part of a yard, other open space, or off-street parking or loading space required about or in connection with any building for the purpose of complying with this resolution/ordinance shall be included as part of a yard, open space for any other building.

(i) **Yards and Setbacks for Accessory Buildings in Residential Zones**. The following setbacks shall be provided for accessory buildings in Residential zones:

(1) Detached garages, carports, patios, tool or storage sheds, playhouses, greenhouses or other accessory buildings shall meet the setbacks required in below Table 1.

TABLE 1 Setbacks from property lines for detached garages, carports, tool or storage sheds, greenhouses or other detached accessory structures

| | Front (b) | Side Adjacent to Street (b) | Side | Rear with Alley (c) | Rear Without Alley |
|---|---|---|---|---|---|
| BUILDINGS LESS THAN 18 FEET (a) (d) (e) (f) | | | | | |
| Approach from a street | 20 | 20 | 3 | 0 | 3 |
| Approach at right angle from an alley | 20 | 10 | 3 | 6 | N/A |
| All others | 20 | 10 | 3 | 0 | 3 |
| BUILDINGS GREATER THAN 18 FEET IN HEIGHT UP TO AND INCLUDING THE MAXIMUM ALLOWED HEIGHT (a) (d) (e) | | | | | |
| Approach from a street | 20 | 20 | 8 | 6 | 8 |
| Approach at right angle from an alley | 20 | 10 | 8 | 6 | N/A |
| All others. | 20 | 10 | 8 | 6 | 8 |

(a) All setbacks are denoted in feet from the property line.

(b) In districts with Front or Side Adjacent to Street setbacks greater than those required in above Table 1, the structure shall meet the most restrictive setback requirement.

(c) No above building or structure nor any part thereof shall protrude into or hang over the public right-of-way.

(d) Structures located adjacent to arterial streets must meet the Arterial Setbacks as outlined in BMCC Section 27-602.

(e) Detached accessory buildings used to house, keep or shelter livestock or fowl shall meet the setbacks described in BMCC Section 27-607.

(f) The side wall of detached accessory buildings in the R-9,600, R-8,000, R-7,000, R-7,000R, R-6,000, R-6,000R, R-5,000 and Residential Manufactured Home zoning districts within the Billings city limits shall be no greater in height than the side walls, excluding a gable wall, of an existing or proposed principal structure on the property.

N/A = Not Applicable

(2) Garages, carports and other accessory buildings attached to a dwelling shall be considered to be part of the dwelling and setbacks shall be the same as those required for such dwelling. In addition, garages and carports attached to the dwelling that have their approach from a street shall be setback from that street property line a minimum of twenty (20) feet or meet the front setback in the zoning district in which it is located, whichever is greater.

(3) Except in the R-9600, R-8,000, R-7,000, R-7,000R, R-6,000, R-6,000R, R-5,000, and Residential Manufactured Home zoning districts within the Billings city limits the maximum size allowed for detached accessory structures shall be based on the following criteria, based on the size of the lot:

– Lots containing less than .25 acres = 1,000 square feet maximum size.

– Lots containing .25 acres up to 1 acre shall use the following formula:

(667 x lot acreage) + 833 = maximum detached structure size)

– Lots containing more than 1 acre = 1,500 square foot maximum size.

This provision shall not apply in the Agricultural-Open or Agricultural-Suburban zoning districts.

(4) Except in the R-9600, R-8,000, R-7,000, R-7,000R, R-6,000, R-6,000R, R-5,000 and Residential Manufactured Home zoning districts within the Billings city limits the maximum total square footage in detached accessory structures on any lot shall not exceed three thousand (3,000) square feet or that amount which, when added to the square footage of the principal structure(s), will achieve the maximum lot coverage allowable in that district, whichever is less. This three thousand (3,000) square foot limit shall not apply in the Agricultural-Open zoning district.

(5) See BMCC Section 27-607, for setbacks regarding detached structures used to house livestock or fowl.

(6) For watercourse setbacks, see BMCC Section 27-616.

(7) No above allowed building or structure nor any part thereof shall protrude into or hang over any public right-of-way.

(8) In the R-9,600, R-8,000, R-7,000, R-7,000R, R-6,000, R-6,000R, R-5,000 and Residential Manufactured Home zoning districts within the Billings city limits detached accessory structure(s) greater than 200 square feet in size shall not exceed the principal building first story square footage on the lot or 1,000 square feet, whichever is less. If the lot is greater than .25 acres maximum total square footage of a detached accessory structure shall be as calculated in Section 3 above or equal to the principal building first story square footage, whichever is less. No detached accessory structure within these residential zoning districts in the Billings city limits shall exceed 1,500 square feet. The maximum total square footage in detached accessory structures on any lot within these residential zoning districts in the Billings city limits shall not exceed 2,000 square feet or the total principal building first story square footage on the lot, whichever is less.

(9) In the R-9,600, R-8,000, R-7,000, R-7,000R, R-6,000, R-6,000R, R-5,000 and Residential Manufactured Home zoning districts within the Billings city limits, horizontal exterior siding is required on detached accessory structures greater than 200 square feet in size.

Sec. 27-311. Illustrations

FIGURE 1: YARD REQUIREMENTS: RESIDENTIAL

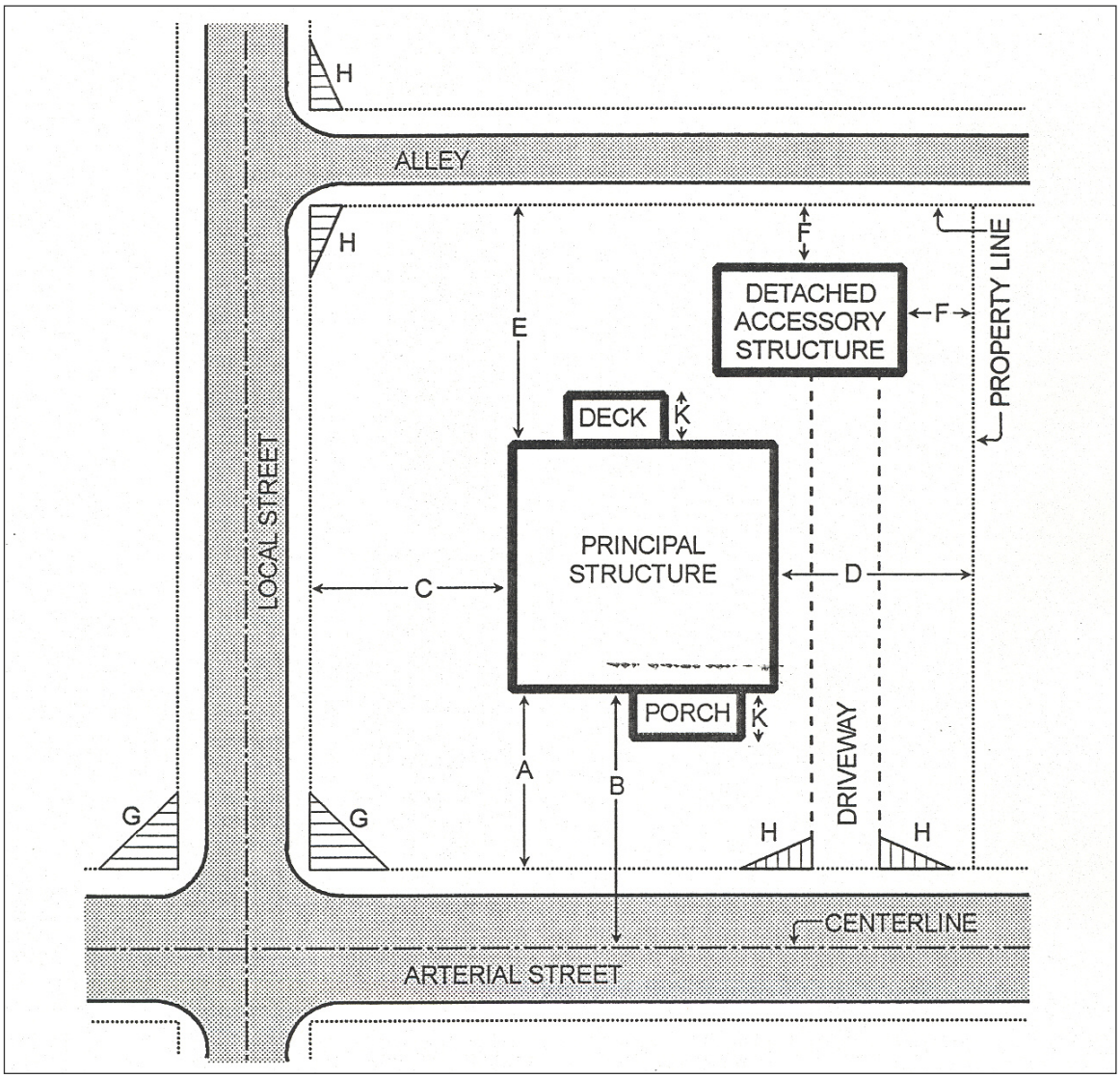


A. FRONT Setback
B. ARTERIAL Setback
C. SIDE ADJACENT TO STREET Setback
D. SIDE Setback
E. REAR Setback
F. DETACHED ACCESSORY STRUCTURE Setback
G. CLEAR VISION TRIANGLE at Street Intersections
H. CLEAR VISION TRIANGLE at Alley and Drive Entrances
I. PERMITTED PROJECTIONS

FIGURE 2: YARD REQUIREMENTS: COMMERCIAL AND INDUSTRIAL

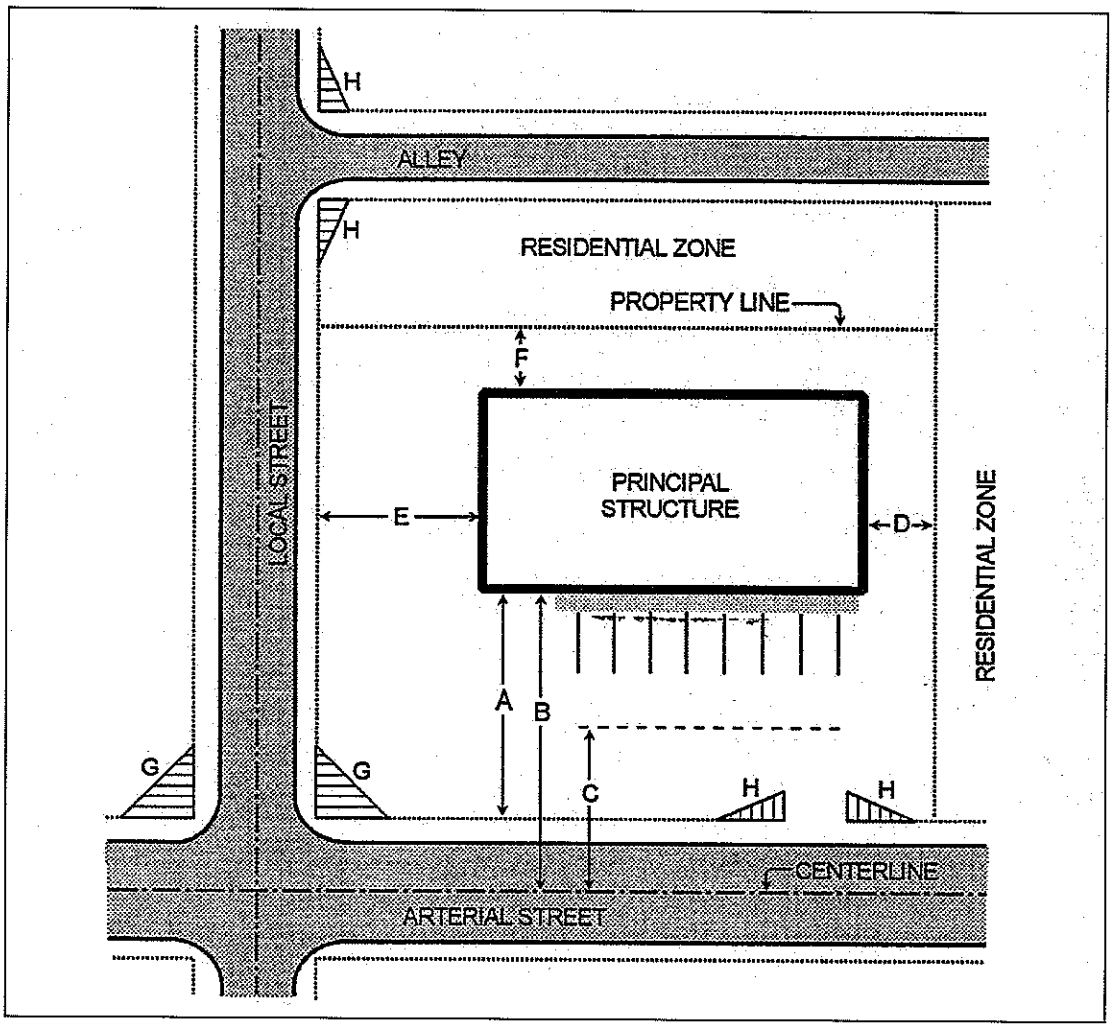


A. FRONT Setback
B. ARTERIAL Setback: Structures
C. ARTERIAL Setback: Required Parking and Driving Isle
D. SIDE Setback
** SIDE Minimum setbacks are fifteen (15) feet when contiguous to residential zones
E. SIDE ADJACENT TO STREET Setback
F. REAR Setback
G. CLEAR VISION TRIANGLE at Street Intersections
H. CLEAR VISION TRIANGLE at Alley and Drive Entrances

## ARTICLE 27-400. NONCONFORMING USES OF LAND NONCONFORMING STRUCTURES AND USES OF STRUCTURES

### SEC. 27-401. INTENT.

(a) The provisions of this chapter shall apply to buildings, structures, lands and uses which become nonconforming as a result of the application of this Resolution/Ordinance [Ord. No. 97-5048, adopted 12/22/1997] to them, or from classification or reclassification of property under Ord. No. 97-5048 or any subsequent amendments thereto. If a use originally authorized by a variance, special review or other valid use permit prior to the effective date, as defined in below subsection B of this Resolution/Ordinance is located within a district in which such use is not permitted by the terms of this Resolution/Ordinance, such use shall be a nonconforming use; however, pre-existing valid uses requiring a special review after the effective date of this Resolution/Ordinance shall not require a special review.

(b) The effective date for these regulations is May 3, 1972 for any property that was located within the limits of the City of Billings on or before that date.

The effective date for any property located within the Yellowstone County 4½ mile jurisdictional area, but outside the limits of the City of Billings is on or before November 6, 1973.

(c) To avoid undue hardship, nothing in this Chapter shall be deemed to require a change in the plans, construction or designated use of any building on which actual construction was lawfully begun prior to the effective date of adoption or amendment of Ord. No. 97-5048 and upon which actual building construction has been carried on diligently. "Actual construction" is hereby defined to include the placing of construction materials in a permanent position and fastened in a permanent manner. Where excavation or demolition or removal of an existing building has been substantially begun preparatory to rebuilding, such excavation or demolition or removal shall be deemed to be actual construction, provided that work shall be carried on diligently.

### SEC. 27-402. NONCONFORMING LOTS OF RECORD.

(a) In any district in which single-family dwellings are permitted, notwithstanding limitations imposed by other provisions of this Resolution/Ordinance, a single-family dwelling and customary accessory buildings may be erected on any vacant single lot of record at the effective date of adoption, as defined in above subsection B, or amendment of this Resolution/Ordinance. Such lot must be in separate ownership and not of contiguous frontage with other lots in the same ownership. This provision shall apply even though such lot fails to meet the requirements for area, that are generally applicable in the district, provided that the yard dimensions, lot coverage and other requirements not involving area of the lot shall conform to the regulations of the district in which such lot is located. An additional variance of area and yard requirements shall be obtained only through affirmative action by the Board of Adjustment (see BMCC Sections 27-1501, et seq.)

(b) If two (2) or more vacant lots or combinations of lots and portions of lots with contiguous frontage in single ownership or record exist at the time of adoption, as defined in Section 27-401, subsection B, or amendment of this Resolution/Ordinance, and if all or part of the lots do not meet the requirements for lot area as established by this Resolution/Ordinance, the land involved shall be considered to be an undivided parcel for the purpose of this Resolution/Ordinance, and no portion of the parcel shall be used or sold which does not meet lot area requirements established by this Resolution/Ordinance, nor shall any division of the parcel be made which leaves remaining any lot, with area below the requirements stated in this Resolution/Ordinance.

## SEC. 27-403. NONCONFORMING USES OF LAND.

Where, on the effective date of adoption, as defined in Section 27-401, subsection B, or amendment of this Resolution/Ordinance, lawful use of land exists that is no longer permissible under the terms of this Resolution/Ordinance as enacted or amended, such use may be continued, so long as it remains otherwise lawful, subject to the following provisions:

(a) No such nonconforming use shall be enlarged or increased, nor extended to occupy a greater area of land than was occupied at the effective date of adoption, as defined in Section 27-401, subsection B, or upon amendment of this Resolution/Ordinance.

(b) No such nonconforming use shall be moved in whole or in part to any other portion of the lot or parcel occupied by such use at the effective date of adoption, as defined in Section 27-401, subsection B, or upon amendment of this Resolution/Ordinance.

(c) If any such nonconforming use of land ceases for any reason for a period of one (1) year or more, any subsequent use of such land shall conform to the regulations specified by this Resolution/Ordinance for the district in which such land is located.

Within a period of one (1) year or less, a manufactured home used for residential purposes which is a legal nonconforming use of land may be replaced by another manufactured home for residential purposes, so long as the new home is not substantially larger than the manufactured home that it replaced. In addition, the new manufactured home shall meet the minimum yard setback requirements including arterial setbacks (see BMCC Section 27-602), along with lot coverage requirements for the zoning district in which it is located.

## SEC. 27-404. NONCONFORMING STRUCTURES.

Where a lawful structure exists at the effective date of adoption, as defined in Section 27-401, subsection B, or amendment of this Resolution/Ordinance that could not be built under the terms of this Resolution/Ordinance by reason of restriction on area, lot coverage, height, yards or other characteristics of the structure or its location on the lot, such structure may be continued so long as it remains lawful, subject to the following provisions:

(a) No such structure may be enlarged or altered in a way which increases its nonconformity unless an enlargement or structural alteration makes the building more conforming or is required by law.

(b) Should such structure be destroyed by any means to an extent of more than fifty (50) percent of its replacement cost at time of destruction, it shall not be reconstructed except in conformity with the provisions of this Resolution/Ordinance.

(c) Should such structure be moved for any reason for any distance whatever, it shall thereafter conform to the regulations of the district in which it is located after it is moved.

(d) Structural alterations may be permitted if necessary to adapt a nonconforming building to new technologies or equipment pertaining to uses housed in such building. Any enlargement necessary to adapt to new technologies shall be authorized only by a variance, as described in BMCC Sections 27-1506 (City) and 27-1511 (County).

## SEC. 27-405. NONCONFORMING USES OF STRUCTURES.

If a lawful use of a structure or of structures and premises in combination exists at the effective date of adoption, as defined in Section 27-401, subsection B, or amendment of this Resolution/Ordinance, that would not be allowed in the district under the terms of this Resolution/Ordinance, the lawful use may be continued so long as it remains otherwise lawful, subject to the following provisions:

(a) No existing structure devoted to a use not permitted by this Resolution/Ordinance in the zone in which it is located shall be enlarged, extended, constructed, reconstructed, moved or structurally altered except in changing the use of the structure to a use permitted in the zone in which it is located.

(b) Any nonconforming use may be extended throughout any parts of a building which were manifestly arranged or designed for such use at the time of adoption, as defined in Section 27-401, subsection B, or amendment of the Resolution/Ordinance, but no such use shall be extended to occupy any land outside such building.

(c) If no structural alterations are made, any nonconforming use of a structure, or structures and premises, may be changed to another nonconforming use provided that the governing body with jurisdiction on the property shall find that the proposed use is equally appropriate or more appropriate to the district than the existing nonconforming use. In permitting such change, the governing body with jurisdiction on the property may require appropriate conditions and safeguards in accordance with the provisions of this chapter. Any proposed change from one nonconforming use to another nonconforming use shall be processed and reviewed under the Special Review provisions of BMCC Sections 27-1501, et seq., and the following criteria shall be considered:

(1) The nature and purpose of the existing nonconforming use;

(2) The difference in quality and character of the proposed use;

(3) The difference in the degree of use of the proposed use, including but not limited to hours of operation and parking requirements;

(4) The reasons for the proposed change; and

(5) The overall impact of the proposed use on the surrounding property.

(d) Any structure, or structures and land in combination, in or on which a nonconforming use is superseded by a permitted use, shall thereafter conform to the regulations for the district in which such structure(s) is located, and the nonconforming use may not be thereafter resumed.

(e) When a nonconforming use of a structure, or structures and premises in combination, is discontinued or abandoned for one (1) year or more, the structure, or structures and premises in combination, shall not thereafter be used except in conformance with the regulations of the district in which it is located. Abandonment shall include, but not be limited to, cessation of the use for one (1) year or more.

(f) Where nonconforming use status applies to a structure and premises in combination, removal or destruction of the structure shall eliminate the nonconforming status of the land. Destruction for the purpose of this subsection is defined as damage to an extent of more than fifty (50) percent of the replacement cost at time of destruction.

(g) Any sexually oriented business, located within the limits of the City of Billings, existing upon passage of this chapter which does not comply with the requirements established herein shall be deemed a legal nonconforming use. All existing legal nonconforming sexually oriented businesses, as of the effective date of this chapter, or any amendment hereto, shall comply with the provisions of this chapter within four (4) years from the date of the enactment of this section or any amendment thereto. (Refer also to BMCC Section 27-611.)

## SEC. 27-406. REPAIRS AND MAINTENANCE.

Any building or other structure containing a nonconforming use, or any nonconforming building or portion thereof, declared unsafe by the Building Official may be strengthened or restored to a safe condition.

## SEC. 27-407. UNLAWFUL USE.

Nothing in this Resolution/Ordinance shall be interpreted as authorization for or approval of a continuance of the use of a structure or premises in violation of the zoning regulations in effect at the time of the effective date of this Resolution/Ordinance.

(Ord. No. 97-5048, § 4, 12-22-97; Ord. No. 99-5079, § 1, 2-8-99)

## Article 27-500. HISTORIC PRESERVATION

## DIVISION 1. GENERALLY

### SEC. 27-501. INTENT.

The intent of this ordinance is to promote the educational, cultural, economic, and general welfare of the community by:

(1) Providing a mechanism to identify and preserve the distinctive historic architectural characteristics of the City of Billings that represent elements of the city's cultural, social, economic, political, military and architectural history;

(2) Fostering civic pride in the beauty and noble accomplishments of the past as represented in the City of Billings prehistoric and historic sites and historic districts;

(3) Conserving and improving the value of property designated as historic sites or within historic districts;

(4) Protecting and enhancing the attractiveness of the city to home buyers, tourists, visitors, and shoppers, and thereby supporting and promoting business, commerce and industry, and providing economic benefit to the city;

(5) Fostering and encouraging preservation, restoration, and rehabilitation of structures, areas, and neighborhoods and thereby preventing future urban blight.

### SEC. 27-502. DEFINITIONS.

For the purposes of this article, the following definitions apply:

*Alteration:* Any act or process that changes one (1) or more of the exterior architectural features of a structure, including, but not limited to, the erection, construction, reconstruction or removal of any structure.

*Area:* A specific geographic division of the City of Billings.

*City administrator:* The city administrator of the City of Billings or his/her designee.

*Construction:* The act of adding an addition to an existing structure or the erection of a new principal or accessory structure on a lot or property.

*Council:* The city council of the City of Billings.

*Demolition:* Any act or process that destroys in part or in whole a historic site or a structure within a historic district.

*Exterior architectural appearance:* The architectural character and general composition of the exterior of a structure, including but not limited to the kind, color, and

texture of the building material and the type, design and character of all windows, doors, light fixtures, signs, and appurtenant elements.

*Historic district:* An area designated as a "historic district" by ordinance of the city council which may contain within definable geographic boundaries one or more historic sites and which may have within its boundaries other properties or structures that, while are not of such historic and/or architectural significance to be designated as historic sites, nevertheless contribute to the overall visual characteristics of the historic site or historic sites located within the historic district.

*Historic site:* A property or structure designated as a historic site by ordinance of the city council pursuant to procedures prescribed herein, that is worthy of rehabilitation, restoration, and preservation because of its historic and/or architectural significance to the City of Billings.

*National register:* National Register of Historic Places. A list, maintained by the US Department of Interior, of sites, properties, objects and districts having local, state or national historical, architectural or cultural significance.

*Preservation board:* The Yellowstone Historic Preservation Board.

*Removal:* Any relocation of a structure on its site or to another site.

*Repair:* Any change not otherwise construed as an alteration, as herein defined, that constitutes replacing broken, worn or damaged materials with like, not necessarily identical, materials and is insignificant to the size and condition of the structure or property. Repainting and re-roofing shall be included under this definition of repair.

*Structure:* Anything constructed or erected, the use of which requires permanent or temporary location on or in the ground, including, but without limiting the generality of the foregoing, building, fences, gazebos, advertising signs, billboards, backstops for tennis courts, radio and television antennae, including supporting towers, and swimming pools.

### SEC. 27-503. HISTORIC PRESERVATION BOARD.

(a) *Members:* The Yellowstone Historic Preservation Board shall consist of nine (9) members with a demonstrated interest, competence, and knowledge in historic preservation. The following five (5) members shall be selected jointly by all signatories to the inter-local agreement establishing the Yellowstone Historic Preservation Board. Each signatory has one (1) vote. In this selection process the simple majority vote will prevail. The board shall include at least three (3) members with professional expertise in the disciplines of history, planning, archaeology, architecture, architectural history, or other historic preservation-related disciplines such as cultural geography or cultural anthropology. The board shall also include two (2) additional members from the following:

One member of the Yellowstone County board of planning;

One member of the Laurel board of planning;

One property owner either residing or owning a business in a historic district or who owns property listed on the National Register of Historic Places;

One member of a city/county preservation society.

The four (4) remaining board members shall be considered "at-large" and shall consist of:

One City of Billings resident appointed by the Billings city council;

One county resident appointed by the Yellowstone County commissioners;

One City of Laurel resident appointed by the Laurel city council;

One Crow Tribal member who lives within the Yellowstone County portion of the Crow Reservation or elsewhere within Yellowstone County appointed by the Crow Tribal council.

(b) *Appointments and terms:* Terms of office for the historic preservation board members shall be for two-year terms and shall be staggered. Upon enactment of this resolution, three (3) members shall be appointed to one-year terms. The following year, all terms shall be for two (2) years.

(c) *Absences and removal:*

(1) Each member shall inform the preservation officer at least one (1) day before the meeting of the inability to attend a board or committee meeting. Such an absence shall be considered an excused absence.

(2) If any member accrues three (3) or more consecutive unexcused absences from regular meetings, notice of which has been given at his/her usual place of work or residences, or by announcement at a meeting attended by him/her, the president may call such absences to the attention of the board which may then recommend to the appointing authority that such member be asked to resign and then another person be appointed to serve out the unexpired term.

(d) *Vacancies:* Vacancies occurring on the board shall be filled within sixty (60) days in the same manner as for the original appointment. This appointment shall be for the remainder of the unexpired term.

(e) *Meetings:* The historic preservation board shall conduct a minimum of one (1) regularly scheduled meeting each month, except that the chairperson may cancel any meeting or schedule special meetings when such meetings are necessary to carry out the provisions of this article.

Special meetings of the board may be called by the chairperson or by two (2) members, upon request to the preservation officer. The preservation officer shall notify members at least two (2) days in an advance of the special meeting.

Meetings shall be open to the public in accordance with the State of Montana Open Meeting Law, and all written or taped minutes, reports and case decisions shall be available to the public.

The historic preservation board shall establish bylaws conforming to the guidelines set forth in the "Certified Local Government Program in Montana."

(f) *Powers and duties:* Yellowstone historic preservation board shall:

(1) Maintain a system for the survey and inventory of historic and prehistoric properties. The information shall be available to the public.

(2) Review and participate in all proposed National Register nominations within the City of Laurel, the City of Billings, the Crow Reservation and/or Yellowstone County.

(3) Encourage public participation while assisting with the enforcement of appropriate state and local legislation concerning historic preservation.

(4) Submit an annual report to the State Historic Preservation Office describing projects, activities, recommendations and decisions made, projects reviewed, recommendations to the National Register of Historic Places, revised resumes of historic preservation board members and member attendance records, and indexed copies of typewritten or tape recorded minutes of all historic preservation board meetings. Copies of the following will be attached to the annual report: inventory forms, survey reports, maps, photographs, and other survey materials or planning documents generated during the preceding year.

(5) Have at least one (1) member attend at least one (1) training session each year and review any orientation materials provided by the State Historic Preservation Office.

(6) Review and comment on land use proposals and planning programs related to historic resources, such as municipal improvements, housing and other public programs.

(7) Consult with city, county, tribal, state and federal agencies on all applications, environmental assessment, environmental impact statements, and other similar documents pertaining to historic districts, historic sites, and landmarks or neighboring properties within the City of Billings and/or Yellowstone County. Comments and recommendations by the historic preservation board will be sent to the Billings city council and the Yellowstone county commissioners.

(8) Review the local zoning regulations for their applicability to the characteristics of the proposed historic districts, and make appropriate recommendations to the

zoning commissions and the boards of adjustment concerning any changes or modifications to the zoning regulations, zoning boundaries, zone change applications, special review applications, or variance applications.

(9) Make recommendations to the boards of adjustments regarding variance change applications within any historic district.

(10) Assist with the preparation and adoption of a comprehensive historic preservation plan and assist with the annual updates of said plan.

(11) Provide information, advice and guidance, upon request by property owners, as to the restoration, rehabilitation, landscaping or maintenance of potentially historic buildings or structures. The historic preservation board may recommend voluntary design guidelines which will be made available to the public for assistance in preservation projects.

(12) Participate in, promote and conduct public information, education and interpretive programs pertaining to historic potential tax incentives and federal and/or state grants that might be available.

(13) Provide, in its discretion, quarterly reports to all governing bodies to discuss its activity for the past quarter. Minutes of board meetings and any other information deemed necessary may be appended to the quarterly reports. A copy of the annual report to the State Historic Preservation Office shall be provided to each of the governing bodies.

(14) Undertake any actions necessary to assure compliance of the preservation board with certified local government requirements.

### SEC. 27-504. HISTORIC PRESERVATION OFFICER.

(a) *Duties:*

(1) The historic preservation officer shall serve as staff to the historic preservation board.

(2) The historic preservation officer must have demonstrated interest, competence or knowledge in historic preservation.

(3) The historic preservation officer will assist with coordinating the local historic preservation programs, help in the development of local surveys, projects and historic preservation planning documents, advise and provide assistance to the historic preservation board, government agencies and the public, and ensure, to the extent practicable, that the duties and responsibilities delegated by this resolution are carried out.

(4) The historic preservation officer shall be appointed by mutual agreement of the Laurel city council, the Billings city council, the Crow Tribal council and the Yellowstone county commissioners.

## SEC. 27-505. SURVEYS AND RESEARCH.

The preservation board shall assist in developing an ongoing survey and research effort in the City of Billings to identify neighborhoods, areas, sites, structures, and objects that have historic, community, architectural, or aesthetic importance, interest or value. As part of the survey, the preservation board shall review and evaluate any prior surveys and studies by any unit of government or private organization and compile appropriate descriptions, facts, and photographs. Before the preservation board shall on its own initiative nominate any landmark for historic designation, it shall first develop a plan and schedule for completion of a survey of the City of Billings to identify potential landmarks. The preservation board shall then systematically identify potential landmarks and adopt procedures to nominate in groups based upon the following criteria.

To qualify as a historic site or historic district, the individual properties, structures, sites, or buildings, or groups of properties, structures, sites or buildings must have significant character, interest, or value as part of the historical, cultural, aesthetic, and architectural heritage of the city, county, state or nation. To qualify as a historic site or district, the property or properties must fulfill one (1) or more of the criteria set forth in subsection (1) below and meet the criteria set forth in subsections (2)a. and (2)d. below.

(1) A building, structure, site, or district will be deemed to have historical or cultural significance if it meets one (1) or more of the following criteria:

a. Is associated in a significant way with the life or activities of a major person important in city, county, state, or national history (for example, the homestead of a local founding family);
b. Is the site of a historic event with significant effect upon the city, county, state, or nation;
c. Is associated in a significant way with a major historic event, whether cultural, economic, social, military, or political;
d. Exemplifies the historical, political, cultural, economic, or social trends of the community in history; or
e. Is associated in a significant way with a past or a continuing institution which has contributed substantially to the life of the city and/or county.

(2) A building, structure, site, or district is deemed to have architectural or aesthetic significance if it fulfills one (1) or more of the following criteria; except that to qualify as a historic interior, the interior must meet the criteria contained within subsections (2)b. and (2)d.:

a. Portrays the environment in an era of history characterized by one (1) or more distinctive architectural styles;
b. Embodies those distinguishing characteristics of an architectural style, period, or method of construction;
c. Is a historic or outstanding work of a prominent architect, designer, landscape architect, or builder; or

d. Contains elements of design, detail, material, or craftsmanship of outstanding quality or which represented, in its time, a significant innovation or adaption to the environment.

(3) A building, structure, site, or district will be deemed to have historic significance if, in addition to or in the place of the previously mentioned criteria, the building, structure, site, or zone meets historic development standards as defined by and listed in the regulations of and criteria for the National Register of Historic Places as prepared by the United States Department of the Interior under the Historic Preservation Act of 1966, as amended. Said regulations, as amended from time to time, are made part of this chapter as if fully set forth herein.

(4) Classifications of Structures and Buildings. All historic buildings, structures, archaeological sites, districts, neighborhoods, and the like, will be classified and designated on the city historic preservation survey, which will be approved by the city council and be made an overlay to the city and county, zoning maps and land use plans. Such buildings, structures, districts, neighborhoods, and the like will be divided into two (2) classes:

a. *Contributing.* Those buildings, structures, archaeological sites, or districts classified as historic shall possess identified historical and architectural merit of a degree warranting their preservation. All buildings, structures, archaeological sites, and the like, listed in the city historic survey, as adopted and approved by the city council and county commission, will be considered worthy of preservation and may be designated as a historic site or a historic district.

b. *Noncontributing.* Those buildings and structures within a historic district not listed in the city historic preservation survey, and those buildings and structures determined by the preservation board to be of no contributing value.

**SEC. 27-506. NATIONAL REGISTER OF HISTORIC PLACES; NOMINATION REVIEW.**

(a) The preservation board shall review proposed nominations to the National Register of Historic Places submitted by the State Historic Preservation Officer or other sponsor qualified pursuant to United States Department of the Interior regulations. The preservation board will develop or receive the documentation necessary to nominate properties to the National Register of Historic Places. The preservation board shall evaluate, in a timely manner, nomination proposals received for completeness. Should a nomination proposal not be technically complete, the preservation board shall notify the proposal's sponsor, identifying the technical deficiencies in writing, within thirty (30) days of receipt of the nomination proposal. If the nomination proposal is technically complete, the preservation board shall place the item on its agenda for the earliest possible regular meeting after notification procedures are complete.

(b) The preservation board shall notify the following of its intention to consider a nomination proposal. In all cases, such notification shall occur at least thirty (30) days but not more than seventy-five (75) days prior to the preservation meeting at which the nomination proposal will be considered.

(1) Owner(s) of record of the property. The list of owners shall be obtained from official tax records and provided with the nomination application. Where there is more than one (1) owner on the list, each separate owner shall be notified.

(2) The mayor of the City of Billings. Said local officials shall have thirty (30) days from receipt of notice within which to submit the preservation board a written recommendation supporting or opposing the nomination.

(3) The State Historic Preservation Officer.

(c) When the preservation board considers a nomination proposal that will impact properties which are normally evaluated by a professional in a specific discipline, and that discipline is not represented on the preservation board, the preservation board shall seek professional expertise in this area before rendering a decision, but failure to obtain such advice shall not invalidate its determination on the proposal.

(d) Nomination proposals shall be considered by the preservation board at a public meeting, and all votes on nomination proposals shall be recorded and made a part of the permanent record of the preservation board meeting. All nomination proposals shall be forwarded, with a record of official action taken by the preservation board and the recommendation of the appropriate local official(s), to the State Historic Preservation Officer within thirty (30) days of the preservation board meeting at which they were considered.

(e) Any person or organization supporting or opposing the nomination of a property to the national register shall be afforded the opportunity to make their views known in writing. Such comments shall be notarized where they contain factual assertions. All such correspondence regarding a nomination proposal shall become part of the permanent record concerning that proposal and shall be forwarded with approved proposals to the state historic preservation officer. In the case of disapproved nomination proposals, letters of support or comment shall be made a part of the permanent record concerning that proposal, and a list of such letters shall accompany the official copy of the disapproved nomination proposal when it is forwarded to the state historic preservation officer.

(f) Nomination proposals to be considered by the preservation board shall be on file at the Yellowstone county board of planning offices for at least thirty (30) days but not more than seventy-five (75) days prior to the meeting at which they will be considered. A copy shall be made available by mail when requested by the public and shall be made available at a location of reasonable local access, such as a local library, courthouse, or other public place.

(g) Any person may appeal the decision of the preservation board regarding a proposed nomination by filing a written appeal with the state historic preservation officer within thirty (30) days of the preservation board decision.

(h) In reviewing national register of historic places nomination proposals, the preservation board shall follow the regulations found in 36 C.F.R. Part 60, and as amended from time to time, promulgated by the National Park Service, Department of the Interior under the Historic Preservation Act of 1966, as amended.

### SEC. 27-507. DESIGNATION OF HISTORIC DISTRICTS.

(a) The following area within the city is designated as the Billings townsite historic district:

> Beginning at the northwest corner of the right-of-way intersection of North 26th Street and 1st Avenue North, located in the original Town of Billings, said point being the point of beginning; thence, southeasterly along the westerly right-of-way line of North 26th Street to the southerly right-of-way line of Montana Avenue, thence northeasterly along said southerly right-of-way line of Montana Avenue 280± feet, thence southeasterly along a bearing perpendicular to the bearing of the southerly right-of-way line of Montana Avenue to the centerline of the Burlington Northern Railroad right-of-way thence northeasterly along said railroad right-of-way line to a point which is the extension of the easterly right-of-way line of North 22nd Street, thence northwesterly along said extension of the easterly right-of-way line of North 22nd Street and along the easterly right-of-way line of North 22nd Street to the northeast corner of the right-of-way intersection of North 22nd Street and 1st Avenue North, thence southwesterly along the northerly right-of-way line of 1st Avenue North to the point of beginning. Included within this area, but not limited to it, are Blocks 111, 112, 113 and 114 of the original Town of Billings.

(b) Additional historic districts may be created by amendment of this section as provided for under Section 27-1002 of this article. Provision shall be made for public participation in the development of any new historic district. [1]

### SECS. 27-508--27-510. RESERVED.

## DIVISION 2. DEMOLITION AND BUILDING PERMITS

### SEC. 27-511. APPROVAL OF BUILDING, EXTERIOR REMODELING AND DEMOLITION PERMITS.

No permit for building, (excluding permits for interior work) exterior remodeling or demolition of any structure situated wholly or partially within the historic district shall be

---

[1] **(Ord. No. 93-4927, § 7, 7-26-93; Ord. No. 94-4970, § 1, 9-26-94)**

granted by the city administrator until the historic preservation board has advised the city administrator concerning the application therefor pursuant to the procedures and criteria set forth in this article. The board may advise the city administrator to approve or disapprove the application or to approve the application with modifications. The city administrator's decision to approve or disapprove the application or to approve the application with modifications shall be based upon advice given by the board and the criteria set forth in this article.

### SEC. 27-512. PROCEDURES FOR HISTORIC PRESERVATION BOARD ADVICE AND CITY ADMINISTRATOR APPROVAL.

Procedures shall conform to the following:

(1) The city administrator shall, immediately upon receipt thereof, submit to the historic preservation board for consideration each complete application for permit for building, (excluding permits for interior work) exterior remodeling or demolition of any structure situated wholly or partially within the historic district. Within ten (10) days after receipt of the application, the board may request that the applicant furnish additional information or drawings concerning the proposed project.

(2) Within thirty (30) days after receipt by the board of any such application, or thirty (30) days after receipt by the board of any additional information or drawings requested from the applicant, the board shall advise the city administrator whether it approves, approves with modifications or disapproves the permit. If the board does not advise the city administrator within such thirty-day period it will be deemed conclusive evidence that the board has advised that the application be approved without modification. The foregoing thirty-day period may be extended by the board for an additional thirty-day period upon consent of the applicant.

(3) Within ten (10) days after the latter of receipt by the historic preservation board of the application or receipt by the board of additional information or drawings requested from the applicant, the board shall set a date for a public hearing on the application.

(4) Notice of the application and hearing shall be given by:

a. Publication of the same in a newspaper of general circulation in the city at least seven (7) days prior to the date set for the hearing;
b. Posting the same on the property affected by the application and in three (3) other conspicuous places in the historic district at least fifteen (15) days prior to the date set for the hearing; and
c. Mailing the same to the applicant at the address stated on the application at least fifteen (15) days prior to the date set for the hearing.

(5) The historic preservation board may continue the hearing to a subsequent time. Any person may appear at the hearing and present such evidence or testimony as the board deems relevant to its decision. Following the hearing, the board

shall advise the city administrator to either approve, approve with modifications or disapprove the application.

(6) The historic preservation board's advice with regard to each application and the reasons therefore, shall be in writing, shall be preserved and shall be available for public inspection.

(7) The final decision by the city administrator shall be reduced to writing and shall be mailed by certified mail, return receipt requested, or personally served on applicant.

### SEC. 27-513. REVIEW BY COUNCIL.

If, pursuant to this article, the city administrator disapproves an application or approves an application with modifications, the applicant may appeal the decision of the city administrator to the council. The appeal must be perfected by the following procedure:

(1) The applicant shall file with the city administrator's office within five (5) working days of the date of the administrator's final decision, a request in writing for review by the city council, and the city administrator shall place the matter on the next council agenda following the administrator's decision.

(2) If the administrator's final decision is contrary to the advice of the board with regard to any application, the decision of the city administrator shall be automatically reviewed by the council and the city administrator shall advise the city clerk, and the matter shall be placed on the next council agenda following the administrator's decision. The council may thereupon convene a public hearing or continue the matter to a public hearing at a more convenient date certain, not more than ten (10) days thereafter.

(3) The council's decision with regard to any matter appealed to it pursuant to this article shall be based upon the criteria set forth in this article.

### SEC. 27-514. STANDARDS FOR REVIEW; DEMOLITION AND BUILDING PERMITS.

In considering an application for a building or demolition permit, the preservation board shall be guided by the following general standards.

(1) Every reasonable effort shall be made to provide a compatible use for a property that requires minimal alteration of the building, structure or site and its environment, or to use a property for its originally intended purpose.

(2) The distinguishing original qualities or character of a building, structure, or site and its environment shall not be destroyed. The removal or alteration of any historic material or distinctive architectural feature should be avoided when possible.

(3) All buildings, structures, and sites shall be recognized as products of their own time. Alterations that have no historical basis and that seek to create an earlier appearance shall be discouraged.

(4) Changes that may have taken place in the course of time are evidence of the history and development of a building, structure, or site and its environment. These changes may have acquired significance in their own right, and this significance shall be recognized and respected.

(5) Distinctive stylistic features or examples of skilled craftsmanship that characterize a building, structure, or site shall be treated with sensitivity.

(6) Deteriorated architectural features shall be repaired rather than replaced, wherever possible. In the event replacement is necessary, the new material should match the material being replaced in composition, design, color, texture, and other visual qualities. Repair or replacement of missing architectural features should be based on accurate duplication of features substantiated by historic, physical or pictorial evidence, rather than on conjectural designs or the availability of different architectural elements from other buildings or structures.

(7) The surface cleaning of structures shall be undertaken with the gentlest means possible. Sandblasting and other cleaning methods that will damage the historic building materials shall not be undertaken.

(8) Every reasonable effort shall be made to protect and preserve archaeological resources affected by, or adjacent to, any project.

(9) Contemporary design for alterations and additions to existing properties shall not be discouraged when such alterations and additions do not destroy significant historical, architectural, or cultural material, and such design is compatible with the size, scale, color, material and character of the property, neighborhood, or environment.

**SEC. 27-515. DEMOLITIONS.**

The preservation board, upon a request for demolition by a property owner, shall consider the following guidelines in evaluating applications for demolition of designated historic sites, or buildings, structures, or appurtenances within designated historic districts:

(1) Whether the structure is of such interest or quality that it would reasonably fulfill criteria for designation for listing on the national register;

(2) Whether the structure is of such design, craftsmanship, or material that it could be reproduced only with great difficulty or economically nonviable expense;

(3) Whether the structure is one of the last remaining examples of its kind in the designated historic district within the city;

(4) Whether retaining the structure would promote the general welfare of the city by providing an opportunity to study local history, architecture, and design, or by developing an understanding of the importance and value of a particular culture and heritage;

(5) Whether there are definite plans for immediate reuse of the property if the proposed demolition is carried out, and what effect those plans will have on the character of the surrounding area.

**SEC. 27-516. CRITERIA FOR DEMOLITION PERMITS.**

(a) No application for a permit to demolish a structure which is subject to this article shall be approved unless:

(1) It is found that the structure to be demolished is not historically or architecturally significant; and

(2) Preservation of the structure is not feasible; or

(3) The city administrator has determined that the structure poses an immediate threat to public safety.

(b) No disapproval of a permit to demolish shall be in effect for more than one (1) year after the city administrator's decision. During such one (1) year period, the historic preservation board may take or encourage the taking of whatever steps seem likely to lead to the structure's preservation. The board may work with the property owner to seek alternative economic uses for the property, may consult with private civic groups, interested private citizens and other public boards or agencies, and may investigate the potential use of the power of eminent domain when preservation of a structure is in the public interest. The board may make such recommendations thereabout to the city administrator or the council as it deems appropriate.

**SEC. 27-517. INFORMAL OPINIONS.**

The historic preservation board may, in its discretion, render informal opinions to any person contemplating application for a permit for building, exterior remodeling or demolition of any structure situated wholly or partially within the historic district. The board will not be bound by its informal opinions.

**SEC. 27-518. CRITERIA FOR BUILDING AND EXTERIOR REMODELING PERMITS.**

No application for a permit for building (excluding interiors of noncontributing structures) or exterior remodeling within the historic district which is subject to this article shall be approved if it is found that the project will have an adverse effect on the historic or architectural significance or integrity of the structure to be remodeled or the historic district as a whole, or if it is found that the project will detract from the overall effect of the historic district and thereby adversely affect the value of other property within the historic district. In making their findings, the historic preservation board and the city administrator shall consider, among other matters, the design, size and scale of the project; the character of materials to be used; the project's relationship to neighboring structures and the historic district as a whole; and applicable fire and safety laws and regulations.

## SEC. 27-519. PUBLIC IMPROVEMENTS.

Any public improvements installed within the historic district shall be compatible with the criteria for approval of permits for building or exterior remodeling set forth in this article to the extent that such installation does not conflict with the requirements of the Manual on Uniform Traffic-Control Devices.

(Ord. No. 93-4927, § 1, 7-26-93) (Ord. No. 93-4927, § 8, 7-26-93; Ord. No. 94-4970, § 1, 9-26-94)

## SEC. 27-601. ABANDONED VEHICLES AND STORAGE RESTRICTIONS.

(a) **Definitions.** For the purposes of this section, the terms used above shall be defined as follows:

***Automobile*** means a two (2) or more wheeled or track vehicle designed to transport one (1) or more persons or properties from one (1) location to another including without limitation: trucks, buses, cars, motorcycles, scooters, farm and industrial equipment.

***Enclosed structure*** means a building that protects the contents thereof from the elements, including sight obscuring walls on all sides and a roof.

***Inoperable vehicle*** means any automobile incapable of immediate operation under its own power safely and in concurrence with governing and applicable traffic ordinances and statutes or any automobile not having current license plates lawfully affixed thereto.

***Junk*** means any worn out, cast off or discarded article or material which is ready for destruction or has been collected or stored as salvage, for conversion to some other use or for reduction into components. Junk includes but is not limited to old or scrap brass, rope, rags, batteries, paper, tires, rubber debris or waste, iron, steel and other old or scrap ferrous or non-ferrous material.

***Junk vehicle*** means any automobile which is ruined, wrecked, partially dismantled and which is not lawfully and validly licensed.

***Merchandise*** means all items of movable personal property offered for sale to the public for which no title is required to be registered with, or issued by, the state.

*Open storage* means the storage for a period of five (5) days or more of an unlicensed or inoperable vehicle, appliance, implement or machinery, or any part thereof, outside of an enclosed structure.

***Permanent storage*** means storage of chattel, salvage, rubbish or junk for a period exceeding five (5) days without moving

(b) ***Storage and display of merchandise in residential districts.*** Outside display of merchandise is prohibited in all residential zoning districts.

(c) ***Storage and display of merchandise in certain commercial districts.*** Outside display of merchandise is permitted in residential professional, neighborhood commercial, community commercial, highway commercial, and controlled industrial zoning districts only if the merchandise is new and not used, is related to the principal use of the property, and such merchandise is removed each night into an enclosed structure. This section shall not apply to retail nurseries or temporary uses and structures regulated by section 27-614. Bufferyards and required landscaping shall not be used for the displaying of merchandise in any zoning districts.

(d) ***Storage or parking of vehicles.*** In all residential zoning districts, storage or parking of commercial vehicles shall be limited to one (1) delivery vehicle not to exceed eight thousand (8,000) pounds G.V.W. (gross vehicle weight).

(e) ***Abandoned vehicles***. All inoperable automobiles, or parts thereof, parked or stored for a period exceeding five (5) days shall be considered abandoned. Any such automobile that in the judgment of the zoning enforcement officer appears to be abandoned, including parts thereto, shall be removed and disposed of in a manner set forth by the zoning enforcement officer.

(f) ***Storage of trailers and recreational vehicles.*** Snowmobiles, boats, or other recreational vehicles and campers, camper trailers or motor homes, and utility/sport trailers may be parked or stored on private property provided that all current accessory building zoning code setback requirements are observed. In addition to accessory building setback requirements, such items shall not be parked any nearer than five (5) feet from any door, window or other opening of a dwelling which provides light, air, entrance to, or exit from the dwelling as needed to preserve the health, safety and general welfare of the occupants of the dwelling.

However, it shall be unlawful for any person or firm to park or store such vehicles in any front yard or to occupy campers, camping trailers or motor homes for living or sleeping purposes.

(g) ***Storage of salvage.*** Permanent open storage of salvage, inoperable vehicles, rubbish or other chattel shall not be permitted in any zoning district. Exceptions to this restriction are principal uses of property (e.g., auto wrecking) which may be permitted in the highway commercial, controlled industrial or heavy industrial zoning districts, as regulated by the commercial/industrial district regulations in BMCC section 27-306.

(h) ***Inoperable vehicle or junk vehicle.*** Storage, parking or leaving any inoperable vehicle or junk vehicle shall not be permitted in any district. This section shall not apply to:

1. Automobiles stored in commercial or industrial districts which are regulated by BMCC sections 27-301, et seq.; or
2. An automobile or part thereof which is completely enclosed within a building in a lawful manner and where it is not visible from the street or other public or private property. [1]

[1] (Ord. No. 97-5048, § 5, 12-22-97; Ord. No. 5094, § 1, 7-26-99; Ord. No. 04-5292, § 1, 7-26-04)

## SEC. 27-602. ARTERIAL SETBACKS.

(a) In any residential or public zoning district, no building or structure shall be erected within eighty (80) feet of the centerline of a principal arterial street, or within seventy (70) feet of the centerline of a minor arterial street. In addition, within any such residential or public zoning district, no required parking area or portion thereof, shall be constructed or located within seventy (70) feet of the centerline of a principal arterial street or within sixty (60) feet of the centerline of a minor arterial street.

(b) In any commercial or industrial zoning district located within the Billings City Limits, no building or structure shall be erected or maintained within sixty (60) feet of the centerline of an arterial street. In addition, within any such commercial or industrial zoning district, no required parking area or portion thereof, including driving aisles, shall be constructed or located within fifty (50) feet of the centerline of a principal arterial street or within forty (40) feet of the centerline of a minor arterial street. The Central Business District (CBD) zoning district shall be exempt from this section.

In any commercial or industrial zoning district located outside the Billings City Limits, but within the County Zoning Jurisdiction, no building or structure shall be erected or maintained within eighty (80) feet of the centerline of a principal arterial street, or within seventy (70) feet of the centerline of a minor arterial street. In addition, within any such commercial or industrial zoning district, no required parking area or portion thereof, including driving aisles, shall be constructed or located within seventy (70) feet of the centerline of a principal arterial street or within sixty (60) feet of the centerline of a minor arterial street.

(c) Any new construction that increases the number of required off-street parking spaces, must locate these additional required parking spaces in areas that comply with above subsections (A) and (B). The term "new construction" shall be defined as construction on a previously vacant lot or parcel, construction of new structures after existing structures are demolished or removed, or expansion of existing structures.

(d) Approved advertising signs and public use controls and systems, trees trimmed up eight (8) feet and canopies with at least eight (8) feet clearance, shall be permitted in this setback area. For the purpose of this subsection, canopies shall be defined as covers that are solely attached to and supported by the structure on which it is attached to and which can be removed without destroying any part of that supporting structure. This shall only apply to canopies attached to the principal structure.

(e) The designation of a street as an arterial shall be recommended by the City Engineer, County Public Works Director or in conformity with the most recent Urban Transportation Plan.

(f) The centerline of such arterials shall be established by the City of Billings or Yellowstone County:

(1) By actual physical establishment by the City Engineer's or County Public Works Office, and approval thereof by the City Council or Board of County Commissioners; or

(2) If not possible to establish the centerline by physical establishment, then the centerline shall be established by resolution/ordinance.

(g) Permitted Projections. The following projections shall be permitted within the setback areas on arterial streets in residential districts:

(1) Fireplaces and bay windows not to exceed two (2) feet;

(2) Roof overhangs, eaves, gutters, cornices or other architectural features not to exceed two (2) feet;

(3) Open exterior stairways or decks not to exceed two (2) feet in side yards, four (4) feet in front yards, nor eight (8) feet in rear yards;

(4) Covered unenclosed porches over front steps or walkways not to exceed four (4) feet;

(5) Ramps that provide accessibility; and

(6) The above projections are not permitted if they protrude into or hang over the public right-of-way.

## SEC. 27-603. BUILDING PERMITS ISSUED PRIOR TO ADOPTION.

Where construction has started pursuant to a building permit validly issued by the City of Billings Building Division prior to the effective date of Ord. No. 97-5048, adopted 12/22/97, it may be completed (under the regulations in effect at the time of issuance) thereunder without regard to this resolution/ordinance.

## SEC. 27-604. FENCES, WALLS AND HEDGES.

(a) Fences, walls and hedges may be erected or maintained in any zoning district provided the height, setback, and material provisions outlined below are followed and a permit is secured. "Fence" for the purposes of this section means any fence wall or hedge. No fence shall be erected or maintained in a public right-of-way.

(b) *Height.* Height for the purposes of this section shall be defined as the vertical distance from the top rail, board or wire to the ground directly below.

(c) Setbacks required. Fences, walls or hedges of up to three (3) feet may be erected or maintained in the required front yard setback as defined in sections 27-308 or 27-309. Fences, walls or hedges between a height of three (3) and six (6) feet may be erected or maintained anywhere outside of the front yard setback, except as described in subsection (d) below. (see figure 6, section 27-618). Any fence, wall or hedge in excess of six (6) feet shall meet all of the yard setback requirements for structures as defined in sections 27-308 or 27-309. None of the above setback requirements shall apply to lands located in the agricultural-open space (A-1), central business district (CBD), controlled industrial (CI), or heavy industrial (HI) zones.

(d) Setbacks for clear vision zones. No fence, wall or hedge greater than three (3) feet in height may be erected or maintained in any zoning district within a clear vision zone pursuant to Section 27-615 and as illustrated in figures 1, 2, and 3 of section 27-618.

(e) Material permitted-residential and commercial zones. All fences in residential, agricultural and commercial zoning districts shall be constructed from materials which are commonly used for fencing and shall not be constructed from railroad ties, wood pallets, tires, rubble or salvaged material. Commonly used fence materials include wood, brick, stone, split railing, chain-link, wire, vinyl, ornamental iron work. Materials not listed are subject to special review.

(f) Material permitted--Industrial zones. All fences in industrial zoning districts shall be constructed from materials commonly used for fencing and shall not be constructed from railroad ties, wood pallets, rubble, or salvaged material. Commonly used fence materials include wood, brick, stone, split railing, chain-link, wire, vinyl, ornamental iron work, finished or coated steel or aluminum building panels. Materials not listed are subject to special review.

(g) Material exception--Barbed wire or electric fence. In the Billings City Limits, no barbed wire or electrical fencing shall be permitted in any residential zoning district. Barbed wire and electrically charged fencing is allowed in the A-1 and A-S districts within Yellowstone County. When electrically charged fences are used in an A-1 or A-S district, such fences shall be posted with warning signs or fluorescent markings at intervals not to exceed one hundred fifty (150) feet, where such fences are adjacent to public rights-of-way.

In the Billings City Limits, no electrical fencing shall be permitted in any commercial or industrial zoning district. Electrically charged fencing is allowed in commercial or industrial districts within Yellowstone County provided that such fences shall be posted with warning signs or fluorescent markings at intervals not to exceed one hundred and fifty (150) feet, where such fences are adjacent to public rights-of-way. Barbed wire fencing is allowed in commercial or industrial zoning districts both within the city limits and Yellowstone County when such material is located not less than eight (8) feet above grade.

(h) Permit required. Any fence between a height of three (3) feet and six (6) feet shall require a permit from the planning department. Any retaining wall exceeding a height of four (4) feet or any fence exceeding a height of six (6) feet shall require a permit from the building department.
(Ord. No. 97-5048, § 5, 12-22-97; Ord. No. 04-5292, § 1, 7-26-04)

## SEC. 27-605. HAZARDOUS WASTE FACILITIES.

(a) Intent. The purpose and intent of this section is to establish review criteria for the citing of any new hazardous waste facility as defined herein, in order to prevent any significant threat to human health or the environment. When used in citing new hazardous waste facilities, the criteria shall:

(1) Protect the residents of the City of Billings and Yellowstone County;

(2) Ensure the structural stability of the new hazardous waste facility;

(3) Protect surface water;

(4) Protect groundwater;

(5) Provide for the safe transportation of hazardous waste to new hazardous waste facilities;

(6) Protect environmentally sensitive areas; and

(7) Protect air quality.

(b) Definitions. For the purposes of this Section, the following definitions shall apply:

(1) HAZARDOUS WASTE: Means a waste or combination of wastes that, because of its quantity, concentration, or physical, chemical, or infectious characteristics, may:

(a) Cause or significantly contribute to an increase in mortality or an increase in serious irreversible or incapacitating reversible illness;

(b) Pose a substantial present or potential hazard to human health or the environment when improperly treated, stored, transported, or disposed of or otherwise managed; or

(c) A material which is classified by the Environmental Protection Agency (EPA) as being Hazardous or Extremely Hazardous.

(2) FACILITY (HAZARDOUS WASTE MANAGEMENT FACILITY): Means all contiguous land and structures, other appurtenances, and improvements on the land used for treating, storing, or disposing of hazardous wastes. A facility may consist of several treatment, storage or disposal operational units.

(3) TRANSFER FACILITY: Means any transporter-owned or operated land, structure, or improvement, including loading docks, parking areas, holding sites, and other similar areas used for the transfer and temporary storage of hazardous wastes and where shipments of hazardous waste are held temporarily for a period of ten (10) days or less during the normal course of transportation, up to but not including the point of ultimate treatment, storage, or disposal.

(4) LONG-TERM STORAGE FACILITY: This facility is the same as a "transfer facility", except that it is designed to store hazardous wastes for a period longer than ten (10) days.

(c) Use Allowed. Any hazardous waste facility shall only be allowed in the Heavy Industrial (HI) zoning district and must be approved through the Special Review procedure as outlined in BMCC Section 27-1501, et seq.

(d) Supplemental Requirements. Any hazardous waste facility shall, in addition to meeting all other requirements of this resolution/ordinance, comply with the following supplemental requirements:

(8) Submit with the required Special Review application, twenty (20) copies of a community and environmental impact statement which shall include the following elements:

a. Description of impact of proposal upon existing environmental conditions:

1. Population and Land Use
2. Soils
3. Drainage
4. Vegetation
5. Topography
6. Wildlife
7. Air Quality
8. Surface Water Quality
9. Ground Water Quality
10. Floodplain Data
11. Scenic Vistas
12. Historic and Cultural Sites

b. Description of Impact of Proposal Upon Existing and Required Services:

1. Public Utilities

i. Water

ii. Sewer

iii. Drainage

iv. Electric

v. Gas

vi. Telephone

2. Schools

c. The applicant(s) shall document the adequacy and availability of fire, police, medical and other emergency management facilities and services in the area, as well as, their familiarity with the substance(s) being treated, disposed or stored. Documentation shall also be required as to the adequacy and availability of transportation means and routes for the purposes of evacuation of the population at risk in the event of an accident. Evacuation methods and routes shall be indicated. In addition, information shall be provided on spill mitigation measures and pollution risk analysis.

Applicants requesting Special Review for a hazardous waste facility shall address each element of the community and environmental impact statement, indicating what impacts are foreseen. Methods shall be proposed to avoid or to mitigate any potential adverse impacts. Failure to provide sufficient documentation for each element or failure to demonstrate effective avoidance or mitigation techniques shall be considered sufficient grounds for denial of the application.

Statements in writing which grant preliminary, tentative or conditional approvals as required by any local, county, state, federal, or public authority shall be submitted to the Planning Department along with all other materials as required by this resolution/ordinance. These documents shall be submitted along with the information required through the Special Review process.

The applicant shall submit any information or documentation, in addition to the above, that the Planning Department deems necessary to fully evaluate the proposal.

(e) Review Criteria. The Planning Department, Zoning Commission and Governing Body, shall, at every step of the review process, take into consideration the following:

(1) The density of population in proximity to the facility;

(2) The size and type of the facility;

(3) The type of waste expected to be present at the facility;

(4) The transportation means and routes available to evacuate the population at risk in an accident, including both spills and fires;

(5) The size and types of other hazardous waste facilities and facilities that handle hazardous waste materials in the adjacent area; and

(6) The availability of fire, police, and other emergency management personnel and medical facilities in the area.

(f) Citing Criteria. Any new hazardous waste facility shall, in addition to all other requirements of this resolution/ordinance, meet the following citing criteria:

(1) No hazardous waste treatment facility shall be located any closer than two thousand (2,000) feet from any residence, school, playground, public park, public recreation area, church or other public building.

(2) No hazardous waste disposal or long-term storage facility, as defined in this section, shall be located any closer than two thousand and six hundred (2,600) feet from any residence, school, playground, public park, public recreation area, church or other public building.

## SEC. 27-606. HOME OCCUPATIONS.

A *Home Occupation* is defined as an occupation carried on by an occupant of a dwelling, which is located in a residential zoning district, as an accessory and incidental activity to the main residential use of the building.

The Planning Department recognizes that the restrictions set forth in this section do not anticipate all possible types of Home Occupations. Therefore, to guide the Planning Department in the enforcement of this section, the department has adopted the following policies:

(1) The Home Occupation should not generate traffic before 7:30 a.m. or after 6:00 p.m.

(2) The occupation should not generate, on average, more than four (4) vehicle trips to the residence during any hour.

The Home Occupation shall comply with all of the following restrictions:

(a) The occupation to be performed must be a use which is allowed outright in the Residential Professional (RP) zoning district. In addition, the following uses, listed by Standard Industrial Classification (S.I.C.), may also be allowed:

| *S.I.C. Number* | *Description* |
|---|---|
| 7231 | Beauty Shops |
| 7241 | Barber Shops |
| 7251 | Shoe Repair Shops |
| 7291 | Tax Return Preparation Services |
| 7631 | Watch, Clock and Jewelry Repair |
| 76-- | Office Only for Miscellaneous Repair Services |
| 7911 | Dance Studios, Schools and Halls |

Uses not listed above may be allowed with written approval from the Zoning Coordinator, if they meet the spirit and intent of this section and will conform to all of the restrictions of this section.

(b) No person shall be employed other than the residents of the dwelling.

(c) The occupation shall be conducted entirely within the dwelling or an accessory building.

(d) The floor area devoted to the occupation shall not exceed five hundred (500) square feet or twenty-five (25) percent of the total ground area occupied by the buildings, whichever is less.

(e) The occupation shall not produce light, noise, vibration, glare, fumes, odors, electrical interference, etc., which is inconsistent with the character of the residential area.

(f) There shall be no sign advertising or calling attention to the home occupation on the premises.

(g) There shall be no display, evidence or activity apparent from the exterior of the lot which would indicate that the premises are being used for any purpose other than that of a dwelling.

(h) There shall be no group instruction, assembly or activity for greater than five (5) persons.

(i) One (1) business vehicle that is associated with the Home Occupation and which does not exceed eight thousand (8,000) pounds Gross Vehicle Weight (G.V.W.), may be parked or stored on the premises. In addition, there shall be no outside storage of materials or equipment related to the Home Occupation, except the one (1) allowed business vehicle.

## SEC. 27-607. LIVESTOCK AND FOWL.

Livestock, as defined in BMCC Section 27-201, shall not be maintained in any zoning district located within the limits of the City of Billings (see also BMCC Sections 4-501 through 4-505). However, horses may be permitted in the City when located within a Planned Development, as described in Section 27-1303, that is specifically designed to accommodate horses and/or equestrian centers

Areas located outside the limits of the City of Billings, but within certain Agricultural or Residential zoning districts, as shown in the Residential District Regulations (see BMCC Section 27-305), shall be permitted to have livestock and/or fowl. In addition, livestock and/or fowl may be permitted as part of a Planned Development, as described in Section 27-1303, and are also exempt from the following animal unit standards, unless specifically referenced within the Planned Development Agreement. However, the standards outlined below must be satisfied, depending upon the size of the property.

The allowance of livestock and/or fowl in commercial or industrial zoning districts, situated outside the limits of the City of Billings, may be permitted when the regulations established in below subsection (b) are met, regardless of the lot size. However, if the number of animals requested exceeds the allowed limit in below subsection (b), then the property must conform to the uses allowed by right or through Special Review, as shown in the Commercial/Industrial District Regulations matrix in BMCC Section 27-306.

(a) Lots which are 2.5 net acres or less in size are allowed to have livestock and/or fowl provided that all of the following regulations are satisfied.

(1) One (1) livestock and/or fowl unit is allowed per twenty thousand (20,000) square feet of land devoted exclusively to the raising of the animal(s). Livestock or fowl that are listed in the livestock and/or fowl unit table(s) below are allowed types of animals under this subsection, with the exception of bison.

(2) Supplemental feeding of the animal(s) is required.

(3) Any keeping of animal(s) in this section shall be secondary and accessory to the primary residential use of the property. Commercial breeding and/or commercial raising of any type of animal or fowl shall be prohibited, except as allowed by right or through Special Review in the Residential District Regulations matrix located in BMCC Section 27-305.

(4) In addition to the above regulations, project animal(s), as defined in BMCC Sections 27-201, are allowed, but shall be limited to one (1) livestock or fowl unit (as defined below) per youth actively enrolled in F.F.A., 4-H or other similar types of programs. In addition, project animals are required to be supplementally fed and shall only be allowed to remain on the property for no more than six (6) months during any twelve (12) month period. Breeding projects shall be exempt from the above time limit.

(5) All accessory structures used for the purpose of housing, keeping or sheltering livestock or fowl shall be setback a distance of fifty (50) feet from any property line and fifty (50) feet from any dwelling.

(6) No accessory building or structure used for the housing of livestock or fowl shall occupy any portion of a required front yard in any district, except in the Agricultural-Open Space (A-1) zoning district. See BMCC Section 27-310, for the allowed maximum size of detached accessory structures.

(b) Lots which are 2.51 to 9.99 net acres in size are allowed to have livestock and/or fowl provided that all of the following regulations are met.

(1) One (1) livestock and/or fowl unit per one (1) acre of land devoted exclusively to the raising of the animal(s), in which the animal(s) is supplementally fed and/or is on irrigated pasture land.

(2) One (1) livestock and/or fowl unit per four (4) acres of land devoted exclusively to the raising of the animal(s), in which there is no supplemental feeding and/or the animal is on unirrigated pasture land.

(3) In addition to the above regulations, project animal(s), as defined in BMCC Section 27-201, are allowed, but shall be limited to one (1) livestock or fowl unit (as defined below) per youth actively enrolled in F.F.A., 4-H or other similar types of programs. In addition, project animals are required to be supplementally fed and shall only be allowed to remain on the property for no more than six (6) months during any twelve (12) month period. Breeding projects shall be exempt from the above time limit.

(4) All accessory structures used for the purpose of housing, keeping or sheltering livestock or fowl shall be setback a distance of one-hundred (100) feet from any property line and fifty (50) feet from any dwelling.

(5) No accessory building or structure used for the housing of livestock or fowl shall occupy any portion of a required front yard in any district, except in the Agricultural-Open Space (A-1) zoning district. See BMCC Section 27-310, for the allowed maximum size of detached accessory structures.

(c) Lots which are greater than 9.99 net acres shall be exempt from this section.

(d) Livestock and fowl units, for the purpose of this section, shall be defined as follows:

| Livestock Class | Livestock Units |
|---|---|
| Cow – mature | 1.00 |
| Cow with calf | 1.00 |
| Bull – mature | 1.00 |
| Bull – yearling | 0.50 |
| Calf – weaned or under 6 months | 0.50 |
| Steer – one year or older | 1.00 |
| Heifer – one year or older | 1.00 |
| Horse – mature | 1.50 |
| Horse with colt | 1.50 |
| Colt – weaned | 1.00 |
| Ewe – mature | 0.25 |
| Ewe with lamb | 0.25 |

| | |
|---|---|
| Lamb – weaned or under 6 months | 0.25 |
| Ram – mature | 0.25 |
| Goat – mature | 0.25 |
| Goat with kid | 0.25 |
| Kid – weaned or under 6 months | 0.25 |
| Bison – mature | 2.00 |
| Bison with calf | 2.00 |
| Bison calf – weaned or under 6 months | 1.50 |
| Hog – mature | 0.25 |
| Hog – weaned | 0.10 |
| Llama | 1.00 |
| | |
| Fowl Class | |
| Hens, roosters or ducks | .25 each |
| Turkeys or geese. | .50 each |

Livestock and/or fowl units for animals not listed herein shall be determined by the Zoning Coordinator.

## SEC. 27-608. MANUFACTURED HOME PARKS AND INDIVIDUAL MANUFACTURED HOMES

For the purposes of this Section, the following definitions shall be utilized in determining the appropriate classification of manufactured homes and modular homes:

(1) **MANUFACTURED HOME**: A dwelling unit that: (a) is constructed in accordance with the standards set forth by the U.S. Department of Housing and Urban Development, (b) is composed of one or more components, each of which was substantially assembled in a manufacturing plant and designed to be transported to the home site on its own chassis, and (c) exceeds forty (40) feet in length and eight (8) feet in width.

(2) **MANUFACTURED HOME, CLASS A**: A manufactured home constructed after July 1, 1976, that meets or exceeds the construction standards promulgated by the U.S. Department of Housing and Urban Development that were in effect at the time of construction and that satisfies each of the following additional criteria:

(a) The home has a length not exceeding four (4) times its width;

(b) The pitch of the home's roof has a minimum vertical rise of three (3) inches for each twelve (12) inches of horizontal run (3:12), and the roof is finished with a type of shingle that is commonly used in standard residential construction;

(c) The exterior siding consists of wood, hardboard, aluminum or vinyl siding comparable in composition, appearance, and durability to the exterior siding commonly used in standard residential construction;

(d) A continuous, permanent perimeter foundation, which complies with the Uniform Building Code, is installed under the home; and

(e) The tongue, axles, transporting lights, and removable towing apparatus are removed after placement on the lot and before occupancy.

(3) **MANUFACTURED HOME, CLASS B**: A manufactured home constructed after July 1, 1976, that meets or exceeds the construction standards promulgated by the U.S. Department of Housing and Urban Development that were in effect at the time of construction but that does not satisfy the criteria necessary to qualify the house as a Class A manufactured home.

(4) **MANUFACTURED HOME CLASS C**: Any manufactured home that does not meet the definitional criteria of a Class A or Class B manufactured home.

(5) **MANUFACTURED HOME PARK**: A residential use in which more than one manufactured home is located on a single lot. Manufactured home parks must also comply with the subdivision regulations for the jurisdiction in which it is located and when located within the limits of the City of Billings, Article 15-500 of the Billings, Montana City Code.

(6) **MODULAR HOME**: A dwelling unit constructed in accordance with the standards set forth in the Uniform Building Code and bearing the insignia of the State of Montana, applicable to site-built homes, and composed of components substantially assembled in a manufacturing plant and transported to the building site for final assembly on a permanent foundation. Among other possibilities, a modular home may consist of two sections transported to the site in a manner similar to a manufactured home (except that the modular home meets the Uniform Building Code Standards applicable to site-built homes), or a series of panels or room sections transported on a truck and erected or joined together on the site.

(7) **COMMERCIAL USE**: Trailers or manufactured homes shall not be used for any commercial use other than an on-premise office in connection with a trailer or manufactured home sales area.

## SEC. 27-609. PLATS RECORDED AFTER EFFECTIVE DATE.

Notwithstanding any other provisions of this resolution/ordinance, any subdivision or certificate of survey, where a completed application has been received by the Planning Department before the effective date of this resolution/ordinance, shall be required to comply with the minimum lot area requirements which were in effect at the time the completed application is received. Said lot(s) or tract(s) shall be deemed nonconforming for the purpose of this resolution/ordinance.

Any subdivision, resubdivision, or certificate of survey, where a completed application was not received by the Planning Department before the effective date of this resolution/ordinance shall be required to comply with the minimum lot area requirements of this resolution/ordinance, depending upon the zone within which it is located.

Nothing in this section shall be interpreted to grant relief from any requirement of the State of Montana regarding minimum lot or tract area for sanitary restrictions.

## SEC. 27-610. SATELLITE ANTENNAS AND DISHES.

(a) For the purpose of this Section, the following definitions shall apply:

(1) **SATELLITE DISH ANTENNA**: A device incorporating a reflective surface that is solid, open mesh or bar configured and is in the shape of a shallow dish, cone, horn or cornucopia. Such device shall be used to transmit and/or receive radio or electromagnetic waves between terrestrially and/or orbitally based uses. This definition shall include but not be limited to what are commonly referred to as satellite earth stations, TVROs (television reception only satellite dish antennas), Direct Satellite Systems (D.S.S.) and satellite microwave antennas.

(2) **SATELLITE SIGNAL, USABLE**: That level of signal received via the satellite dish antenna which will run the television and/or radio with a minimum level of distortion, a distortion level that is barely discernible to the naked eye and a picture quality consistent with other reception in the area.

(b) Residential Districts. The following setbacks and height restrictions shall apply in residential zoning districts:

(1) Satellite dish antennas shall be placed only in the rear yard.

(2) In the event that a usable satellite signal cannot be obtained from the rear yard, the satellite dish antenna may be located on the side or front yard provided that no satellite dish antenna shall be placed in a required front or side setback or arterial setback.

(3) In the event that a usable satellite signal cannot be obtained by locating the satellite dish antenna on the rear, side or front yard of the property, such satellite dish antenna may be placed on the roof of the dwelling structure. These satellite dish antennas or pole mounted antennas shall not extend more than ten (10) feet above the height limit established for the zone in which the structure is located.

(4) In either above subsections (2) or (3), it is the responsibility of the owner to provide proof, satisfactory to the Zoning Coordinator, that a usable satellite signal cannot be obtained from the required location.

(5) No satellite dish antenna shall exceed a diameter of twelve (12) feet.

(6) No satellite dish antenna may be installed on a portable or movable device except as a temporary means (not to exceed 30 days) to test for a usable satellite signal.

(c) Commercial and Industrial Districts. The following setbacks and height restrictions shall apply in commercial and/or industrial zoning districts:

(1) No satellite dish antenna shall be placed in any required front yard, side adjacent to street or arterial setback.

(2) No satellite dish antenna shall be placed in any required side setback when contiguous to residentially zoned property.

(3) A satellite dish antenna may be permanently mounted or may be installed on a portable or movable device.

(4) No satellite dish antenna (whether permanent or portable) shall be installed in a required parking space.

(5) No satellite dish antenna shall exceed the maximum height of the zoning district.

(d) Permit Required. Before any satellite antenna is erected in any zoning district, the property owner(s) shall first obtain the applicable permits from the Building Official.

(1) A building permit is not required for installation of satellite dish antennas which are four (4) feet or less in diameter.

(2) All satellite dish antennas and the construction and installation thereof shall conform to the building and electrical codes adopted by the Building Division.

(3) Satellite dish antennas shall meet all manufacturer's specifications, be of noncombustible and corrosive-resistant material, and be erected in a secure, wind-resistant manner.

## SEC. 27-611. SEXUALLY ORIENTED BUSINESSES. (CITY ONLY)

(a) Purpose and Intent. It is the purpose of this section to regulate sexually oriented businesses to promote the health, safety, morals, and the general welfare of the citizens of the City of Billings and Yellowstone County, and to establish reasonable uniform regulations to prevent the continued deleterious location and concentration of sexually oriented businesses within the City and County jurisdictions. The provisions of this section have neither the purpose nor effect of imposing a limitation or restriction on the content of any communicative materials, including sexually oriented materials. Similarly it is not the intent or effect of these regulations to restrict or deny access by adults to distributors and exhibitors of sexually oriented entertainment to their intended market. Neither is it the intent nor effect of these regulations to condone or legitimize the distribution of obscene materials.

(b) Findings and Determinations. The Billings City Council and Yellowstone County Commission hereby finds and determines that:

(1) The establishment of adult uses in business districts which are immediately adjacent to and which serve residential neighborhoods has a deleterious effect on both the business and residential segments of the neighborhood, causing or contributing to blight and a downgrading of property values.

(2) The establishment of more than two (2) adult uses within six hundred (600) feet of each other has a deleterious effect on surrounding residential and business areas and the fostering of such businesses within a close proximity tends to create a "skid row" atmosphere.

(3) The location of several adult uses in the same neighborhood tends to attract an undesirable quantity and quality of transients, a circumstance which adversely affects property values, causes an increase in crime and encourages residents and businesses to move elsewhere.

(4) Concern for, and pride in, the orderly planning and development of a neighborhood should be encouraged and fostered in those persons comprising residential and business segments of that neighborhood.

(c) Definitions.

(1) Adult Arcade means any place to which the public is permitted or invited wherein coin-operated or slug-operated or electronically, electrically, or mechanically controlled still or motion picture machines, projectors, or other image-producing devices are maintained to show images to five (5) or fewer persons per machine at any one (1) time, and where the images so displayed are distinguished or characterized by an emphasis on the depiction or description of "specified sexual activities" or "specified anatomical areas."

(2) Adult Book Store or Adult Video Store means a commercial establishment which, as one (1) of its principal business purposes, offers for sale or rental for any form of consideration any one (1) or more of the following:

a. Books, magazines, periodicals or other printed matter, or photographs, films, motion pictures, video cassettes, video reproductions, slides, or other visual representations which are characterized by an emphasis on the depiction or description of "specified sexual activities" or "specified anatomical areas"; or

b. Instruments, devices, or paraphernalia which are designed for use in connection with "specified sexual activities."

(3) Adult Motel means a hotel, motel, or similar commercial establishment which:

a. Offers accommodations to the public for any form of consideration; provides patrons with closed-circuit television transmissions, films, motion pictures, video cassettes, slides, or other photographic reproductions which are characterized by an emphasis on the depiction or description or "specified sexual activities" or "specified anatomical areas"; and has a sign visible from the public right-of-way which advertises the availability of this adult type of photographic reproductions;

b. Offers a sleeping room for rent for a period of time that is less than ten (10) hours; or

c. Allows a tenant or occupant of a sleeping room to sub-rent the room for a period of time that is less than ten (10) hours.

(4) Adult Motion Picture Theater means a commercial establishment where, for any form of consideration, films, motion pictures, video cassettes, slides, or similar photographic reproductions are regularly shown which are characterized by an emphasis on the depiction or description of "specified sexual activities" or "specified anatomical areas."

(5) Church or Other Place of Worship means a building which is used primarily for religious worship and related religious activities, including but not limited to churches, convents, monasteries, shrines, and temples.

(6) City means the City of Billings, Montana.

(7) County means Yellowstone County, Montana.

(8) Establishment means and includes any of the following:

a. The opening or commencement of any sexually oriented business as a new business;

b. The conversion of an existing business, whether or not a sexually oriented business, to any sexually oriented business;

c. The additions of any sexually oriented business to any other existing sexually oriented business; or

d. The relocation of any sexually oriented business.

(9) Sexually Oriented Business means an "adult" arcade, "adult" book store, "adult" video store, "adult" motel, or "adult" motion picture theater.

(10) Specified Anatomical Area means the male genitals in a state of sexual arousal and/or the vulva or more intimate parts of the female genitals. Specified Sexual

(11) Activities means and includes any of the following:

a. The fondling or other erotic touching of human genitals, pubic region, buttocks, anus, or female breasts;

b. Sex acts, normal or perverted, actual or simulated, including intercourse, oral copulation, or sodomy;

c. Masturbation, actual or simulated; or

d. Excretory functions as part of or in connection with any of the activities set forth in above (a) through (c).

(12) Transfer of Ownership or Control of sexually oriented business means and includes any of the following:

a. The sale, lease, or sublease of the business;

b. The transfer of securities which constitute a controlling interest in the business, whether by sale, exchange or similar means; or

c. The establishment of a trust, gift, or other similar legal device which transfers the ownership or control of the business, except for transfer by bequest or other operation of law upon the death of the person possessing the ownership or control.

(d) Classification. Sexually oriented businesses are classified as follows:

(1) Adult Arcades;

(2) Adult Book Stores or Adult Video Stores;

(3) Adult Motels; and

(4) Adult Motion Picture Theaters.

(e) Location of Sexually Oriented Business.

(1) No person, whether as a principal or agent, clerk or employee, either for himself or any other person, or as an officer of any corporation, or otherwise, shall place, maintain, own, or operate any sexually oriented business within one thousand (1,000) feet of the following residential zones:

a. Agricultural Suburban (A-S) Zone;

b. Residential 15,000 (R-150) Zone;

c. Residential 9,600 (R-96) Zone;

d. Residential 8,000 (R-80) Zone;

e. Residential 7,000 Restricted (R-70R) Zone;

f. Residential 7,000 (R-70) Zone;

g. Residential 6,000 Restricted (R-60R) Zone;

h. Residential 6,000 (R-60) Zone;

i. Residential 5,000 (R-50) Zone;

j. Residential Multi-Family (RMF) Zone;

k. Residential Multi-Family - Restricted (RMF-R) Zone;

l. Residential Manufactured Home (RMH) Zone; or

m. Entryway Mixed Use (EMU) Zone.

(2) No person, whether as a principal or agent, clerk or employee, either for himself or any other person, or as an officer of any corporation, or otherwise, shall place, maintain, own, or operate any sexually oriented business within one thousand (1,000) feet of the following land uses:

a. Public library;

b. Public playground or park;

c. Public or private school and its grounds, from kindergarten through twelfth grade;

d. A state licensed family day care home, group day care home, or day care center; or

e. Church or other place of worship.

(3) No person, whether as a principal or agent, clerk or employee, either for himself or any other person, or as an officer of any corporation, or otherwise, shall place, maintain, own or operate any sexually oriented business within six hundred (600) feet of another sexually oriented business.

(4) For purposes of this section, specified distances will be measured in a straight line, without regard to intervening structures, from the property line of the sexually oriented business to the property line of the preceding land uses or zoning districts.

(5) In addition to the preceding requirements, sexually oriented businesses are permitted in the following zones only:

a. Central Business District (CBD) Zone;

b. Highway Commercial (HC) Zone;

c. Controlled Industrial (CI) Zone; or

d. Heavy Industrial (HI) Zone.

(f) Nonconforming Use - Amortization period established. (Refer to BMCC Section 27-405(G))

## SEC. 27-611. SEXUALLY ORIENTED BUSINESSES.

ADOPTED FOR COUNTY ZONING JURISDICTION June 20, 2006

(a) Purpose and Intent. It is the purpose of this section to regulate sexually oriented businesses to promote the health, safety, morals, and the general welfare of the citizens of Yellowstone County, and to establish reasonable uniform regulations to prevent the continued deleterious location and concentration of sexually oriented businesses within the County jurisdictions. The provisions of this section have neither the purpose nor effect of imposing a limitation or restriction on the content of any communicative materials, including sexually oriented materials. Similarly it is not the intent or effect of these regulations to restrict or deny access by adults to distributors and exhibitors of sexually oriented entertainment to their intended market. Neither is it the intent nor effect of these regulations to condone or legitimize the distribution of obscene materials.

(b) Findings Yellowstone County Commission hereby finds and determines that:

Based upon evidence concerning the adverse secondary effects of sexually oriented businesses on the community presented in hearings and reports made available to the City Council and Board of County Commissioners, and upon findings incorporated in the cases of *City of Renton v. Playtime Theatres, Inc. 475* U.S.41 (1986); *Young v. American Mini Theatres,* 426 U.S. 50 (1976); *and Barnes v. Glen Theatre, Inc.*, 501 U.S. 560 (1991); *Arcara v. Cloud Books, Inc.* 478 U.S. 697 (1986); *California v. LaRue,* 409 U.S. 109 (1972); *Iacobucci v. City of Newport, Ky,* 479 U.S. 92 (1986); *United States v. O'Brien,* 391 U.S. 367 (1968); *DLS Inc. v. City of Chattanooga,* 107 F 3rd 403(6th Cir. 1997); *Kev, Inc. v. Kitsap County*, 793 F. 2nd 1053 (9th Cir 1986); *Hang On Inc. v. City of Arlington*, 65 F. 3rd 1248 (5th Cir. 1995); *South Florida Free Beaches Inc. v. City of Miami*, 7344 F 2n 608 (11th Cir 1984); and *N.W. Enterprises v. City of Houston*, 27 F. Supp. 2d 754 (S.D. Tex. 1998), as well as studies conducted in other cities including but not limited to, Phoenix, Arizona; Minneapolis, Minnesota; Houston, Texas; Indianapolis, Indiana; Amarillo, Texas; Garden Grove, California; Los Angeles, California; Whittier, California; Austin, Texas; Seattle, Washington; Oklahoma City, Oklahoma; Cleveland, Ohio; and Beaumont, Texas; and findings reported in the Final Report of the Attorney General's Working Group on the Regulation of Sexually Oriented Businesses (June 6, 1989, State of Minnesota), and statistics obtained from the U.S. Department of Health and Human Services, Centers for Disease Control and Prevention, the City of Billings and Yellowstone Commission find that:

(1) Sexually oriented business lend themselves to ancillary unlawful and unhealthy activities that are currently uncontrolled by the operators of the establishments. Further, there is currently no mechanism to make owners of these establishments responsible for the activities that occur on their premises.

(2) Crime statistics show that all types of crimes, especially sex-related crimes, occur with more frequency in neighborhoods where sexually oriented businesses are located. See, e.g. Studies of the cities of Phoenix, Arizona; Indianapolis, Indiana; and Austin, Texas.

(3) Sexual acts, including masturbation, sadomasochistic abuse, and oral and anal sex, occur at sexually oriented businesses, especially those which provide private or semi-private booths or cubicles for viewing films, videos or live sex shows. See, e.g. *California v LaRue*, 409 U.S. 109, 111 (1972); See also Final Report of the Attorney General's Commission on Pornography (1986) at 377.

(4) Offering and providing such booths and/or cubicles encourages such activities, which creates unhealthy conditions. See, e.g. Final Report of Attorney Generals' Commission on Pornography (1986) at 367-77.

(5) Persons frequent certain adult theaters, adult arcades, and other sexually oriented businesses, for the purpose of engaging in sex within the premises of such sexually oriented businesses. See e.g. *Arcara v. Cloud Books Inc*. 478 U.S. 697, 698 (1986), see also Final Report of the Attorney General's Commission on Pornography (1986) at 376-77.

(6) At least 50 (fifty) communicable diseases may be spread by activities occurring in sexually oriented businesses including, but not limited to, syphilis, gonorrhea, human immunodeficiency virus infection (HIV- AIDS), genital herpes, hepatitis B, Non A, Non B amebiasis, salmonella infections, and shigella infections, See, e.g. Study of Fort Meyers, Florida.

(7) As of December 31, 1996, the total number of reported cases of AIDS in the United States caused by the human immunodeficiency virus (HIV) was 581, 429. See, e.g. Statistics of the U.S. Department of Health and Human Services, Centers for Disease Control and Prevention.

(8) As of December 31, 1999, there have been 92 (ninety-two) reported cases of AIDS in the State of Montana for the years 1997 through 1999.

(9) The total number of cases of genital Chlamydia trachomatis infection in the United States reported in 1997 was 526,653, an 8% increase over the year 1996. See, e.g. Statistics of the U.S. Department of Health and Human Services, Centers for Disease Control and Prevention.

(10) The total number of cases of early (less than one year) syphilis in the United States reported during the twelve year period 1985-1997 was 387,233. See, e.g. Statistics of the U.S. Department of Health and Human Services, Centers for Disease Control and Prevention.

(11) The number of cases of gonorrhea in the United States reported annually remains at a high level, with a total of 1,901365 cases reported during the period 1993-1997. See e.g. Statistics of the U.S. Department of Health and Human Services, Centers for Disease Control and Prevention.

(12) The Surgeon General of the United States, in his report of October 22, 1986, advised the American public that AIDS and HIV infection may be transmitted through sexual contact, intravenous drug use, exposure to infected blood and blood components, and from an infected mother to her newborn.

(13) According to the best scientific evidence available, AIDS and HIV infection, as well as syphilis and gonorrhea, are principally transmitted by sexual acts, See, e.g. Findings of the U.S. Department of Health and Human Services, Centers for Disease Control and Prevention.

(14) Sanitary conditions in some sexually oriented businesses are unhealthy, in part, because the activities conducted therein are unhealthy, and, in part, because of the unregulated nature of the activities and the failures of the owners and operators of the facilities to self-regulate those activities and maintain those facilities. See, e.g. Final Report of the Attorney General's Commission on Pornography (1986) at 377, and testimony to the Montana Senate Judiciary Committee February 9, 2001, in reference to SB399.

(15) Numerous studies and reports have determined that bodily fluids, including semen and urine, are found in the areas of sexually oriented businesses where persons view "adult" oriented films. See, e.g., Final Report of the Attorney General's Commission on Pornography (1986) at 377.

(16) Studies show nude dancing in adult establishments increases prostitution, increases sexual assaults, and attracts other criminal activity. See, e.g., Barnes v. Glen Theatre, 501 U.S. 560, 583 (1991).

(17) Nude dancing in adult establishments increases the likelihood of drug dealing and drug use. See, e.g., Kev, Inc. v. Kitsap County, 793 F .2d 1053, 1056 (9th Cir. 1986).

(18) The findings noted in paragraphs numbered (1) through (17) raise substantial governmental concerns.

(19) Sexually oriented businesses have operational characteristics which should be reasonably regulated in order to protect those substantial governmental concerns.

(20) Removal of doors on adult booths and requiring sufficient lighting on the premises with adult booths advances a substantial governmental interest in curbing illegal and unsanitary sexual activity occurring in adult establishments.

(21) The general welfare, health, morals and safety of citizens in Yellowstone County will be promoted by enactment of this regulation.

(c) Definitions.

(1) Adult Arcade means any place to which the public is permitted or invited wherein coin-operated or slug-operated or electronically, electrically, or mechanically controlled still or motion picture machines, projectors, or other image-producing devices are maintained to show images to five (5) or fewer persons per machine at any one (1) time, and where the images so displayed are distinguished or characterized by an emphasis on the depiction or description of "specified sexual activities" or "specified anatomical areas."

(2) Adult Book Store or Adult Video Store means a commercial establishment which, as one (1) of its principal business purposes, offers for sale or rental for any form of consideration any one (1) or more of the following:

a. Books, magazines, periodicals or other printed matter, or photographs, films, motion pictures, video cassettes, video reproductions, slides, or other visual representations which are characterized by an emphasis on the depiction or description of "specified sexual activities" or "specified anatomical areas"; or

b. Instruments, devices, or paraphernalia which are designed for use in connection with "specified sexual activities."

(3) Adult Motel means a hotel, motel, or similar commercial establishment which:

a. Offers accommodations to the public for any form of consideration; provides patrons with closed-circuit television transmissions, films, motion pictures, video cassettes, slides, or other photographic reproductions which are characterized by an emphasis on the depiction or description or "specified sexual activities" or "specified anatomical areas"; and has a sign visible from the public right-of-way which advertises the availability of this adult type of photographic reproductions;

b. Offers a sleeping room for rent for a period of time that is less than ten (10) hours; or

c. Allows a tenant or occupant of a sleeping room to sub-rent the room for a period of time that is less than ten (10) hours.

(4) Adult Motion Picture Theater means a commercial establishment where, for any form of consideration, films, motion pictures, video cassettes, slides, or similar photographic reproductions are regularly shown which are characterized by an emphasis on the depiction or description of "specified sexual activities" or "specified anatomical areas."

(5) Church or Other Place of Worship means a building which is used primarily for religious worship and related religious activities, including but not limited to churches, convents, monasteries, shrines, and temples.

(6) City means the City of Billings, Montana.

(7) County means Yellowstone County, Montana.

(8) Establishment means and includes any of the following:

a. The opening or commencement of any sexually oriented business as a new business;

b. The conversion of an existing business, whether or not a sexually oriented business, to any sexually oriented business;

c. The additions of any sexually oriented business to any other existing sexually oriented business; or

d. The relocation of any sexually oriented business.

(9) Nudity or State of Nudity means a male appearing without clothing to conceal his genitals or anal cleft or a female appearing without clothing to conceal her breasts, genitals or anal cleft. A male or female’s genitals or anal cleft are concealed when they are not visible. A female’s breasts are concealed when her areolas and nipples are not visible.

(10) Sexually Oriented Business means an adult bookstore, adult theater, adult motel, adult massage parlor, adult sauna, adult entertainment center, adult cabaret, adult health/sport club, adult steam room/bathhouse facility and/or nude dancing establishment

(11) Specified Anatomical Area means the male genitals in a state of sexual arousal and/or the vulva or more intimate parts of the female genitals.

(12) Specified Sexual Activities means and includes any of the following:

a. The fondling or other erotic touching of human genitals, pubic region, buttocks, anus, or female breasts;

b. Sex acts, normal or perverted, actual or simulated, including intercourse, oral copulation, or sodomy;

c. Masturbation, actual or simulated; or

d. Excretory functions as part of or in connection with any of the activities set forth in above (a) through (c).

(13) Transfer of Ownership or Control of sexually oriented business means and includes any of the following:

a. The sale, lease, or sublease of the business;

b. The transfer of securities which constitute a controlling interest in the business, whether by sale, exchange or similar means; or

c. The establishment of a trust, gift, or other similar legal device which transfers the ownership or control of the business, except for transfer by bequest or other operation of law upon the death of the person possessing the ownership or control.

(14) Viewing Room/Booth/Adult Arcade means a room or booth of less than one hundred fifty (150) square feet of floor space to which the public is permitted or invited wherein coin-operated or slug-operated or electronically, electrically, or mechanically controlled still or motion picture machines, projectors, or other image-producing devices are maintained to show images to five (5) or fewer persons per machine at any one (1) time, and where the images so displayed are distinguished or characterized by an emphasis on the depiction or description of "specified sexual activities" or "specified anatomical areas."

(d) Classification. Sexually oriented businesses are classified as follows:

(1) Adult Arcades;

(2) Adult Book Stores or Adult Video Stores;

(3) Adult Motels; and

(4) Adult Motion Picture Theaters.

(e) Location of Sexually Oriented Business.

(1) No person, whether as a principal or agent, clerk or employee, either for himself or any other person, or as an officer of any corporation, or otherwise, shall place, maintain, own, or operate any sexually oriented business within one thousand (1,000) feet of the following residential zones:

a. Agricultural Suburban (A-S) Zone;

b. Residential 15,000 (R-150) Zone;

c. Residential 9,600 (R-96) Zone;

d. Residential 8,000 (R-80) Zone;

e. Residential 7,000 Restricted (R-70R) Zone;

f. Residential 7,000 (R-70) Zone;

g. Residential 6,000 Restricted (R-60R) Zone;

h. Residential 6,000 (R-60) Zone;

i. Residential 5,000 (R-50) Zone;

j. Residential Multi-Family (RMF) Zone;

k. Residential Multi-Family - Restricted (RMF-R) Zone;

l. Residential Manufactured Home (RMH) Zone; or

m. Entryway Mixed Use (EMU) Zone.

(2) No person, whether as a principal or agent, clerk or employee, either for himself or any other person, or as an officer of any corporation, or otherwise, shall place, maintain, own, or operate any sexually oriented business within one thousand (1,000) feet of the following land uses:

a. Public library;

b. Public playground or park;

c. Public or private school and its grounds, from kindergarten through twelfth grade;

d. A state licensed family day care home, group day care home, or day care center; or

e. Church or other place of worship.

(3) No person, whether as a principal or agent, clerk or employee, either for himself or any other person, or as an officer of any corporation, or otherwise, shall place, maintain, own or operate any sexually oriented business within six hundred (600) feet of another sexually oriented business.

(4) For purposes of this section, specified distances will be measured in a straight line, without regard to intervening structures, from the property line of the sexually oriented business to the property line of the preceding land uses or zoning districts.

(5) In addition to the preceding requirements, sexually oriented businesses are permitted in the following zones only:

a. Central Business District (CBD) Zone;

b. Highway Commercial (HC) Zone;

c. Controlled Industrial (CI) Zone; or

d. Heavy Industrial (HI) Zone.

(f) Nonconforming Use - Amortization period established. (Refer to BMCC Section 27-405(G)

(g) Applicability. The provision of this section shall apply to all existing and future sexually oriented businesses. Pursuant to MCA 76-2-208 and Section 27-401 of these regulations, any such existing business that does not meet the zoning district restrictions or the distance limitations, may continue its existence as a nonconforming use; but such nonconforming use will

be subject to curtailment by current state law and these regulations. If a sexually oriented business is nonconforming to these regulations and such use is discontinued or abandoned for a period of thirty (30) consecutive days the nonconforming status shall lapse and any subsequent use of the property shall conform to the regulations specified by this resolution/ordinance for the district in which such land is located.

(h) Sign Limitations. Notwithstanding any other city ordinance or county resolution, code or regulations to the contrary, it shall be unlawful for the operator of any sexually oriented business or any other person to erect, construct, or maintain any sign for the sexually oriented business other than the one (1) primary sign and one (1) secondary sign, as provided herein.

(1) Primary signs shall have no more than two (2) display surfaces. Each such display surface shall:

a. not contain any flashing lights;

b. be a flat plane, rectangular in shape;

c. not exceed seventy-five (75) square feet in area or the maximum size allowed under any other relevant city ordinance or county resolution, whichever is less; and

d. not exceed ten (10) feet in height or ten (10 feet in length or the maximum size allowed under any other relevant city ordinance or county resolution, whichever is less.

(2) Primary signs shall contain no photographs, silhouettes, drawings or pictorial representations of any type and may contain only the name of the business.

(3) Each letter forming a word on a primary sign shall be of solid color, and each letter shall be the same print-type, size and color. The background behind such lettering on the display surface of a primary sign shall be uniform and solid color.

(4) Secondary signs shall have only one (1) display surface. Such display surface shall:

a. be a flat plane, rectangular in shape;

b. not exceed twenty (20) square feet in area or the maximum size allowed under any other relevant city or county regulations, whichever is less;

c. not exceed five (5) feet in height and four (4) feet in width or the maximum size allowed under any other relevant city or county regulations, whichever is less; and

d. be affixed or attached to any wall or door of the business.

(5) Each sexually oriented business operation must post a sign on each door stating with “Adults only” or “No Minors Allowed”.

(i) Operating Standards. All sexually oriented businesses shall operate in accordance with the following:

(1) No employee shall solicit business outside the building in which the business is located;

(2) All live entertainment in sexually oriented businesses shall be performed on a platform or other exclusive area provided for such purpose, and no entertainer or performer shall be permitted to leave such platform or area while entertaining or performing. This platform or other exclusive area shall be constructed in such a manner as to keep the performers at least nine (9) feet away from patrons;

(3) Nudity and specified sexual activities while on the premises of a sexually oriented business, other than adult motel, shall be prohibited. Nothing in these regulations shall be construed to prohibit a person from appearing in a state of nudity while using a restroom. Restrooms may not contain video reproduction equipment or be used in any way to circumvent this zoning regulation;

(4) No sexually oriented business shall operate between the hours of 12:01 am and 9:00 am;

(5) No sexually oriented business, other than an adult motel, shall be located in any building where alcoholic beverages are dispensed or consumed; and

(6) No minors shall be allowed in sexually oriented businesses.

(j) Operating Standards that Pertain to Establishments that Exhibit Sexually Explicit Films, Videos or any other Images. A sexually oriented business which exhibits on the premises in a viewing room of less than one hundred fifty (150) square feet of floor space, a film, video cassette, other video reproduction that specified sexual activities or specified anatomical areas, shall comply with the following requirements:

(1) The interior of the premises shall be configured in such a manner that there is an unobstructed view from a manager's station of the entire area of the premises to which any patron is permitted access for any purpose, excluding restrooms. If the premises has two or more manager's stations designated, then the interior of the premises shall be configured in such a manner that there is an unobstructed view of the entire area of the premises to which any patron is permitted access for any purpose from at least one of the manager's stations, excluding restrooms. The view required in this subsection must be direct line of sight from the manager's station;

(2) No opening or holes of any kind shall exist between viewing booths/rooms or adult arcades;

(3) No doors shall be allowed on viewing booths/rooms or adult arcades;

(4) The premises shall be equipped with and have in continuous operation, while patrons are present, overhead lighting fixtures of sufficient intensity to illuminate every place to which patrons are permitted access at an illumination of not less than five (5.0) foot-candle as measured at the floor level; and

(5) All floor coverings and walls in viewing booths/rooms and adult arcades are to be constructed of nonporous, easily cleanable surfaces, with no rugs or carpeting.

(k) Building Exterior Appearance.

(1) It shall be unlawful for an owner or operator of sexually oriented business to allow merchandise or activities of the establishment to be visible from outside the establishment.

(2) It shall be unlawful for the owner or operator of a sexually oriented business to allow the exterior portion of the sexually oriented business to have flashing lights, words, lettering, photographs, silhouettes, drawings, or pictorial representations of any type except to the extent permitted by the provisions of this section.

(3) It shall be unlawful for the owner or operator of a sexually oriented business to allow exterior portions of the establishment to be painted any color other than a single monochromatic color. This provision shall not apply to a sexually oriented business if the following conditions are met:

(a) The establishment is part of a commercial multi-unit center; and

(b) The exterior portions of each individual unit in the commercial multi-unit center, including the exterior portions of the business, are painted the same color as one another or are painted in such a way so as to be a component of the overall architectural style or pattern of the commercial multi-unit center.

(4) Nothing in this section shall be construed to require painting of an otherwise unpainted exterior portion of a sexually oriented business.

## SEC. 27-612. SUPPLEMENTAL COMMERCIAL DEVELOPMENT STANDARDS.

Certain commercial uses shall be specifically restricted as follows:

(a) Bars, Taverns and Lounges. Any person desiring to use any premises or to erect, construct or alter any new or existing building or structure for use as a bar, tavern, lounge or any commercial establishment which serves alcoholic beverages as a primary or accessory use shall first make application for Special Review as regulated in BMCC Sections 27-1503 and 27-1509. No building, structure or premises shall be used for retail alcoholic beverage sales unless:

(1) A distance of six hundred (600) feet between property lines, measured in a straight line, is maintained from any building that is predominantly used as a church or school or from a public park that contains a children's playground or playfield.

a. Properties or establishments which are located in the Central Business District zoning district are exempt from subsection 1.

b. Properties may be granted a waiver from the 600 foot separation required in subsection 1. if the governing body finds that a physical barrier exists between the proposed use and the use requiring the 600 foot separation. These barriers include, but are not limited to, the following:

1. An arterial street with no existing or proposed signalized pedestrian crossing;

2. A building or buildings that entirely obstruct the view between the separated uses; and/or

3. No direct physical access exists between the separated uses. The person applying for the Special Review must provide the governing body with proof that the proposed property or establishment meets one of the above described physical barriers or that other types of physical barriers exist that warrant the waiving of the 600-foot separation.

Exemptions to above subsection A. for establishments previously granted a Special Review are located in BMCC Section 27-613.

(b) Drive-in Service. Any persons desiring to use any premises or to erect, construct or alter any new or existing building or structure for a drive-in service as defined in BMCC Section 27-201 shall satisfy the following criteria, based upon the adjoining zoning district(s).

(1) When a drive-in establishment adjoins (including any location across an alley) residentially zoned property, the use shall obtain approval of a Special Review as outlined in BMCC Sections 27-1503 and 27-1509.

(2) All other drive-in establishments, including those which are located across a public street from residentially-zoned property, shall meet the following criteria:

a. A traffic accessibility study shall be completed and approved by the City Engineer or County Public Works Director; and

b. The use shall comply with all other sections of this code.

(c) Gambling Operation. Any gambling operation as defined in Article 7-1100 of the Billings, Montana City Code, other than for nonprofit organizations, shall be allowed only in those zones specified in BMCC Section 27-306, and shall meet all of the rules, regulations and requirements of this resolution/ordinance pertaining to bars, taverns and lounges, except that this provision shall not apply to bingo.

## SEC. 27-613. SUPPLEMENTAL SPECIAL REVIEW STANDARDS.

(a) Bars, Taverns and Lounges. The following exemptions from the Special Review requirements shall apply to those establishments serving alcoholic beverages, which have previously been approved pursuant to a Special Review by the City Council or Board of County Commissioners:

1. Such an establishment shall be allowed to remodel, expand or relocate within the same structure without an additional Special Review provided that:

    a. The gross floor area of the remodeled, expanded or relocated establishment is not over ten (10) percent greater than the gross floor area originally occupied by the establishment;

    b. The number of potential occupants is not increased by more than ten (10) percent, than the number that is currently allowed;

    c. The number of new parking stalls is not more than ten (10) percent greater than the original number of spaces; and

    d. All other requirements of this resolution/ordinance and/or the Billings, Montana City Code are met.

2. Such an establishment in which additions and/or remodels include an outdoor patio lounge shall be required to obtain Special Review approval, as outlined in BMCC Sections 27-1503 and 27-1509.

(b) Churches. Churches and other places of worship shall be reviewed as a Special Review use in all residential zones pursuant to BMCC Section 27-305. The following exemptions from the Special Review requirements shall only apply to those churches and other places of worship which have previously been approved pursuant to a Special Review by the City Council or Board of County Commissioners or which are legal nonconforming uses:

1. Such a church or place of worship shall be allowed to remodel or expand without an additional Special Review provided that:

    a. The number of potential occupants is not increased by more than ten (10) percent, than the number that is currently allowed;

    b. The gross floor area of the facility after such remodeling or expansion is not over ten (10) percent greater than the gross floor area originally occupied by the facility;

    c. The number of new parking stalls is not more than ten (10) percent greater than the original number of spaces; and

    d. All other requirements of this resolution/ordinance and/or the Billings, Montana City Code are met.

2. If, at the time the original or subsequent Special Review was conducted and approved, the applicant submitted a master plan showing: (a) future additions to the structure(s); (b) future structure(s); and/or (c) future parking area(s), those

future improvements may be constructed without additional Special Review provided that these future improvements were considered in the Special Review approval and all other requirements of this resolution/ordinance and/or the Billings, Montana City Code are met. Minor modifications and expansions to the future improvements identified on the master plan may also be constructed without additional Special Review provided that such modifications and/or expansions to the master plan meet the provisions of above subsection (1).

(c) Other Special Review Uses. Uses not listed in above subsections (a) or (b), which have been approved pursuant to a Special Review by the City Council or Board of County Commissioners, may be allowed to expand or remodel without an additional Special Review, provided that the expansion or remodeling meets all of the following criteria:

1. The gross floor area of the remodeled or expanded establishment is not over ten (10) percent greater than the gross floor area originally occupied by the establishment;

2. The number of potential occupants is not increased by more than ten (10) percent, than the number that is currently allowed;

3. The number of new parking stalls is not more than ten (10) percent greater than the original number of spaces; and

4. All other requirements of this resolution/ordinance and/or the Billings, Montana City Code are met.

## SEC. 27-614. TEMPORARY USES AND STRUCTURES.

**(a)** *Definitions.* For the purposes of this Section, the definitions found in BMCC section 27-201 for both temporary uses and temporary structures shall be used in the regulation of such uses and structures. In addition, all uses contained in temporary structures shall be considered temporary uses of property and therefore must comply with the provisions of this section. All temporary uses and structures shall also comply with the Uniform Fire Code.

This section shall not apply to sidewalk vendors governed by Article 7-1200 of the Billings, Montana City Code.

**(**b**)** *Temporary uses in nonresidential zoning districts.*

(1) *Group 1 temporary uses.* This group shall be defined as temporary uses of property continuing for less than seventy-two (72) hours. Group 1 uses do not require a temporary use/structure permit from Planning & Community Development. Uses in this group shall comply with the following:

a. Such use shall be an allowed use in the underlying zoning district;

b. Any temporary structure must be setback five (5) feet behind all property lines;

c. No part of the temporary use or temporary structure shall block any defined clear vision area (BMCC27-615) for driving aisles, drive approaches from streets, or at the intersection of streets or alleys;

d. Signs advertising the temporary use or activity are allowed at the same location as the temporary use. Signage may not exceed one-hundred (100) square feet in area and may be displayed while the temporary use is on the property. Wall signs affixed to temporary structures and freestanding signs are allowed. The maximum height of any freestanding sign is eight (8) feet from finished grade. Paper or cardboard signs are prohibited. . Banner signs are exempt from the limitations found in the City Sign Code {Section 27-700(b)(1)(b)}.

e. All signage and temporary structures must be removed at the time the temporary use has ceased on the property.

(2) *Group 2 temporary uses.* This group shall be defined as temporary uses of property continuing for longer than seventy-two (72) hours but less than sixty-one (61) days and are required to obtain a temporary use/structure permit from the Planning & Community Services Department.

a. The following temporary uses may be allowed in this temporary use group:

1. Carnival, circus, seasonal sales or other uses as allowed in the district regulations in BMCC section 27-306.

b. Supplemental standards.

Uses in this group shall comply with the following:

1. Such use shall be an allowed use in the underlying zoning district;

2. Any temporary structure must be setback five (5) feet behind all property lines;

3. No part of the temporary use or temporary structure shall block any defined clear vision area (BMCC27-615) for driving aisles, drive approaches from streets, or at the intersection of streets or alleys;

4. Signs advertising the temporary use or activity are allowed at the same location as the temporary use. Signage may not exceed one hundred (100) square feet in area and may be displayed while the temporary use is on the property. Wall signs affixed to temporary structures and freestanding signs are allowed. The maximum height of any freestanding sign is eight (8) feet from finished grade. Paper or cardboard signs are prohibited. . Banner signs are exempt from the limitations found in the City Sign Code {Section 27-700(b)(1)(b)}.

5. All signage and temporary structures must be removed at the time the temporary use has ceased on the property.

6. New access drives to public right-of-ways must be approved by the City of Billings Engineering Division or County Public Works Department as required.

7. A business license for temporary uses located within the city limits must be obtained if required by Billings Municipal City Code (BMCC) Chapter 13-400 (Finance and Revenue).

**(3)** *Group 3 temporary uses.* This group shall be defined as temporary uses of property continuing for longer than sixty-one (61) days but less than one (1) year and are required to obtain a temporary use permit from the Planning & Community Services Department.

a. The following temporary uses may be allowed in this temporary use group, but must be located in a district that allows the use, as specified in the district regulations in BMCC sections 27-305 and 27-306:

1. Greenhouses or other similar seasonal-oriented uses, as determined by the zoning coordinator;

2. Portable classrooms;

3. Portable offices; or

4. Other uses, such as carry-out food and/or beverage service.

b. Location restrictions.

1. Any Group 3 temporary use/structure existing upon adoption of this chapter, which does not comply, depending upon its location, with the applicable city or county site development regulations, shall comply with such standards within one (1) year from the date of the enactment of this section or any amendment thereto;

2. Any new or relocated temporary use must be located on a site which complies, depending upon its location, with the applicable city or county site development regulations, including landscaping, surfacing and number of required off-street parking spaces;

3. The structure shall be a factory-built structure and shall not have an axle(s). Temporary structures which do not comply with one or both of these requirement(s) and which exist on the date of adoption of these regulations, shall be deemed legal nonconforming structures and may continue to be used as a temporary structure, provided the temporary use and structure complies with all other requirements of this section; and

4. Temporary uses as listed in above subsection (3)a.4. shall also comply with the following criteria:

   a. Maximum size of the structure shall be ten (10) feet by twelve (12) feet or one hundred twenty (120) square feet;

   b. Site circulation shall be approved by the city traffic engineer or county public works director, along with the location of any drive-in window. This group of temporary uses shall be exempt from any special review requirements for drive-in service;

   c. The temporary use must provide the required number of paved off-street parking spaces. In addition, the temporary use shall not utilize any parking spaces that would make the principal use deficient in the required number of off-street parking spaces;

   d. Utilities to serve the temporary use shall be located underground or suspended overhead, in compliance with all applicable codes; and

   e. All structures are subject to local, county and state requirements and must obtain all relevant licenses before a temporary use/structure permit is issued.

c. Supplemental Standards.

1. When submitting for a temporary use/structure permit, a Group 3 use shall provide the following:

   a. Existing site plan, including parking stalls and buildings;

   b. Proposed site plan, including location of temporary use and its relationship to existing site circulation and off-street parking spaces and driving aisles, including existing and proposed surfacing;

   c. Location of drive-in service, if applicable;

   d. Setbacks from property lines and arterial streets;

   e. Size of temporary structure; and

   f. Proposed use of the temporary structure.

2. Signs advertising the temporary use or activity are allowed at the same location as the temporary use. Signage may not exceed one-hundred (100) square feet in area and may be displayed while the temporary use is on the property. Wall signs affixed to temporary structures and freestanding signs are allowed. The maximum height of a freestanding sign is eight (8) feet from finished grade. Banner signs, paper or cardboard signs are prohibited.

3. The temporary use must provide sufficient space to accommodate the structure and paved off-street parking for customer and use-related vehicles;

4. Clear Vision Standards set forth in BMCC section 27-615 shall be followed;

5. Access to any public right-of-way must be approved by the City of Billings Engineer~~'s~~ ing Division or County Public Works ~~office~~ Department;

6. It shall be the responsibility of the owner of the temporary structure to ensure that the structure is secured to withstand an eighty (80) miles per hour (m.p.h.) wind load and to meet all applicable Americans with Disabilities Act (A.D.A.) and accessibility standards;

7. All Group 3 temporary structures, regardless of size, which contain electrical wiring, and are placed on property within the Billings city limits, shall have such electrical wiring permitted, inspected and approved by the City of Billings Building Division. All temporary structures that exceed 120 square feet, except greenhouses, shall have the structure permitted, inspected and approved by the City of Billings Building Division or labeled as a factory-built structure by the State of Montana Building Codes Bureau prior to issuance of a temporary use/structure permit; and. A temporary use/structure permit shall be obtained by the owner and a business license, if required, shall be obtained by the operator. Such temporary use/structure permit shall be valid for a period of not more than one (1) year. An annual renewal may be given by the Zoning Coordinator, provided that the use complies with the above requirements. However, permits for portable offices or classrooms may be renewed only one time per location.

**(c)** *Temporary uses in residential or agricultural zoning districts.* In any residential district, the temporary use of land for uses listed below may be allowed for a period not to exceed sixty-one (61) days and are required to obtain a temporary use permit from the Planning & Community Services Department.

(1) *Seasonal sales.* The sales of seasonal items including but not limited to holiday decorations in residential zoning districts shall be allowed when all of the following restrictions are met:

a. The sale must be conducted on a church, ~~or~~ school ~~parking lot~~ or other tax exempt premises which provides sufficient space to

accommodate the seasonal sales and off-street parking for customer and other sale related vehicles;

b. Signs advertising the temporary use or activity are allowed at the same location as the temporary use. Signage may not exceed ~~one~~ thirty-two (32) square feet in area and may be displayed while the temporary use is on the property. Wall signs affixed to temporary structures and freestanding signs are allowed. The maximum height of any freestanding sign is eight (8) feet from finished grade. Banner signs, paper or cardboard signs are prohibited.

c. Clear Vision Standards set forth in BMCC section 27-615 shall be followed; and

d. All signage and temporary structures must be removed at the time the temporary use has ceased on the property.

(2) *Roadside stands.* The sale of flowers or produce at temporary roadside stands shall be allowed when all of the following restrictions are met:

a. Only items which are produced on the premises may be sold on the premises;

b. Any structure used must be portable and removed after the temporary use/structure has ceased operation. However, structures which are located in the agricultural-open space (A-1) zoning district may be used even if they are permanent;

c. Signs advertising the temporary use or activity are allowed at the same location as the temporary use. Signage may not exceed thirty-two (32) square feet in area and may be displayed while the temporary use is on the property. Wall signs affixed to temporary structures and freestanding signs are allowed. The maximum height of any freestanding sign is eight (8) feet from finished grade. Banner signs, paper or cardboard signs are prohibited.

d. The use must provide sufficient space to accommodate the stand and off-street parking for customer and other sale related vehicles;

e. No structure, either temporary or permanent, nor any parking area shall be located within any public right-of-way and shall meet the Clear Vision Standards set forth in BMCC section 27-615;

f. New access to any public right-of-way must be approved by the City of Billings Engineering Division or County Public Works Department ~~office~~; and

g. All signage and temporary structures must be removed at the time the temporary use has ceased on the property.

(d) *Fireworks stands.* The erection of a temporary fireworks stand may be permitted if it meets the following restrictions:

(1) The stand is located outside the limits of the City of Billings and is situated in one of the following zoning districts:

a. Public (P) zone;

b. Community commercial (CC) zone;

c. Highway commercial (HC) zone;

d. Controlled industrial (CI) zone;

e. Heavy industrial (HI) zone; or

f. Agricultural-open space (A-1) zone.

(2) No fireworks stand shall be allowed to operate within five hundred (500) feet of any other structure. Nor shall any fireworks stand be allowed to operate within one thousand five hundred (1,500) feet of structures which have any flammable or combustible liquid handling, distribution or sales (including gas pumps);

(3) All fireworks stands shall display warning signs in red letters on white background with letters not less than three (3) inches in height and one-half ( 1/2) inch in stroke. Such signs shall state:

a. Danger - Explosives

b. No smoking

c. No discharge of fireworks within five hundred (500) feet

d. No parking of flammable or combustible liquid transportation vehicles within five hundred (500) feet

(4) There must be a minimum of fifty (50) feet clear cut radius measured from the corner of each exterior wall. Vegetation within this radius shall be a maximum of two (2) inches in height and shall be raked clean of any dead vegetation. Any trees within this radius will be subject to review and approval by the county fire marshal;

(5) Each fireworks stand shall have a minimum of two (2) pressurized water extinguishers (class 2A or approved equivalent) on premises at all times;

(6) Location of each stand shall also be approved by the county fire marshal;

(7) Each fireworks stand shall be setback a minimum of fifty (50) feet from any public right-of-way;

(8) All fireworks stands shall receive fire protection from a fire protection service licensed or registered in the State of Montana;

(9) An application for a permit must be submitted a minimum of fifteen (15) working days prior to the fireworks season, as defined by M.C.A. 50-37-106. The sale of fireworks shall only be allowed within this time period. However, the fireworks stand, without any sales occurring, may be allowed to be erected between June 17 through July 12;

(10) Signs advertising the temporary use or activity are allowed at the same location as the temporary use. Signage may not exceed one hundred (100) square feet in area

and may be displayed while the temporary use is on the property. Wall signs affixed to temporary structures and freestanding signs are allowed. The maximum height of any freestanding sign is eight (8) feet from finished grade. Banner signs, paper or cardboard signs are prohibited. All signage and temporary structures must be removed at the time the temporary use has ceased on the property.

(11) The fireworks stand must provide sufficient space to accommodate the stand and off-street parking for customer and other sale-related vehicles;

(12) An "Application For Sale of Fireworks" must be obtained and signed by the planning department, county fire marshal, Yellowstone county treasurer and the applicant. In addition, the applicant must obtain "Proof of Fire Protection";

(13) No structure, either temporary or permanent, nor any parking area shall be located within any public right-of-way; and

(14) Access to any public right-of-way must be approved by the county public works office.

(e) *Temporary structures.*

(1) *Construction or equipment sheds.* The temporary use of buildings or modular structures for offices or equipment sheds during construction projects may be permitted in any zoning district. A temporary use/structure permit is not required if the structure is part of an approved construction project. In addition, all structures shall meet the following criteria:

a. Any such structure shall be removed upon completion of the construction project; and

b. No such structure shall be used for living or sleeping purposes.

(2) *Other temporary structures.* Temporary structures not used for construction or equipment sheds may be allowed when the following criteria are met:

a. For Group 3 uses, the structure shall meet the applicable setbacks for the zone in which it is located, including Arterial Setbacks as found in BMCC section 27-602;

b. The structure shall meet the Clear Vision Standards set forth in BMCC section 27-615;

c. No such structure shall be used for living or sleeping purposes; and

d. The use of the structure shall comply with BMCC sections 27-614(b) and 27-614(c), whichever is applicable.

e. A temporary use/structure permit shall be obtained for each location by the owner for Group 2 and Group 3 uses as defined in Sec. 27-614(b).

f. A temporary use/structure permit shall be obtained for each location by the owner for Seasonal Sales and Roadside Stands in Residential and Noncommercial zoning districts as defined in Sec. 27-614(c).

(3) *Time limit established.* The zoning coordinator shall establish the time period that a building or modular structure can be used on a temporary basis. This time period shall coincide with the temporary use/structure permit time period established under above subsections (b) or (c), whichever is applicable. The structure shall be removed when the temporary use is discontinued or the permit has expired. An extension for the renewal of the temporary structure permit only, may be granted by the zoning coordinator, if it is found that unusual and/or extraordinary circumstances exist.

(f) *Temporary use/structure permit required.* Before any Group 2 or Group 3 temporary use or structure is established, the property owner shall obtain a temporary use/structure permit for each location from the zoning coordinator or his/her designee. For Group 3 temporary uses, the temporary use permit holder shall post a one thousand five hundred ($1,500) bond, money order or cashiers check for each location with the Planning & Community Services Department to ensure timely removal of the use and/or structure. Before any Seasonal Sale or Roadside Stand is established in a Residential or Noncommercial zoning district, the property owner shall obtain a temporary use/structure permit for each location from the zoning coordinator or his/her designee.

(Ord. No. 97-5048, § 5, 12-22-97)

## SEC. 27-615. VISIBILITY AT INTERSECTIONS.

(a) On corner lots at the intersection of all streets, except those intersections which are controlled by stop signs or traffic signals, no fence, hedge, wall, shrub, structure or vision impediment over thirty-six (36) inches in height above an established top-of-curb grade shall be located within a triangular area formed by the intersecting street centerlines and a straight line joining such intersecting lines at points one hundred and ten (110) feet distant from the point of intersection measured along the centerlines of the streets (See BMCC Section 27-618, Figure 3).

(b) On corner lots at intersections where one (1) or more approaches are controlled by either a stop sign or a traffic signal, no fence, hedge, wall, shrub, structure or vision impediment over thirty-six (36) inches in height above an established top-of-curb grade shall be located within a triangular area formed by the intersecting lines at points twenty-five (25) feet distant from the point of intersection as measured along the property lines (See BMCC Section 27-618, Figure 2).

(c) On the street side of all lots where an alley or private driveway enters the street right-of-way, a triangular clear vision zone shall be maintained. Such zone shall be measured ten (10) feet into the lot from the edge of the sidewalk nearest the property line or where no sidewalk exists, from the edge of the property line, and twenty (20) feet parallel to the street measured from the edge of any alley, away from the alley, along the edge of the sidewalk nearest the property line or, where no sidewalk exists, along the property line. No fence, hedge, wall, shrub or structure over thirty-six (36) inches in height above an established top-of-curb grade shall be erected or maintained within the above defined this clear vision triangle (See BMCC Section 27-618, Figure 1). If no sidewalk exists, the point of reference for all measurements shall be determined by the City Engineer or County Public Works Director.

(d) Approved advertising signs, and public use controls and systems may be permitted in this above defined triangular area. In addition, trees with a maximum trunk diameter of one (1) foot measured four (4) feet above the ground line, and trimmed of all branches between the ground line and eight (8) feet in height, may be permitted in this above defined triangular area.

## SEC. 27-616. WATERCOURSE SETBACKS.

(a) The following watercourse standards have been established to help minimize or prevent any destruction of improvements when flood events occur in areas which do not have a delineated floodplain. This section shall only apply to areas which are outside the limits of the City of Billings and which lie on a watercourse listed in below subsection (c).

(b) Any newly constructed structure, addition to an existing structure or other similar improvements shall meet one of the following watercourse standards when located adjacent to a watercourse, as defined in BMCC Section 27-201, which does not have a floodway/floodplain delineated by the Federal Emergency Management Agency (FEMA).

(1) The structure, addition or similar improvement shall be setback fifty (50) feet from the centerline of the watercourse; or

(2) The structure, addition or similar improvement shall have a finished floor level which is located two (2) feet in elevation, above the highest point on the adjacent watercourse bank (See BMCC Section 27-618, Figure 4).

The Yellowstone County Floodplain Administrator shall make any required determinations regarding the location of the watercourse centerline or its bank elevation, whether by physical inspection and/or submittal of survey documents.

(c) For the purposes of this section, the following creeks and drainages shall be classified as "watercourses" and shall conform to the restrictions in above subsection (B). These "watercourses" include: the South Fork of Alkali Creek, Basin Creek, Bitter Creek, Brockway Coulee, Dirt Creek, Five Mile Creek, Hogan’s Slough and the undelineated portions of Dry Creek and Unnamed Creek.

## SEC. 27-617. ZERO LOT LINE CONDITIONS.

Where an individual owns two (2) adjoining lots or where the owners of the two (2) adjoining lots make legal written agreement, a zero lot line may be used for single-family dwellings, but only so as to create a zero lot line on one (1) side of any lot (See BMCC Section 27-618, Figure 5).

## SEC. 27-618. ILLUSTRATIONS.

FIGURE 1. VISIBILITY AT ALLEY AND DRIVE APPROACHES

At the intersection of any alley or any driveway in a commercial zone and a public street, the illustrated clear vision triangle shall be maintained.

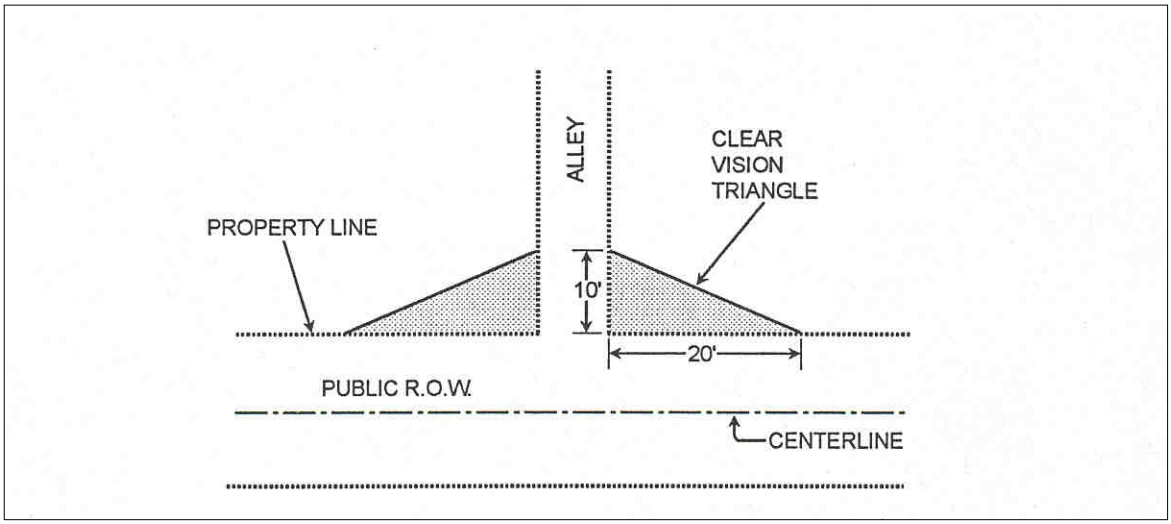


FIGURE 2. VISIBILITY AT INTERSECTIONS: CONTROLLED

At any intersection where one (1) or more approaches are controlled by a stop sign or traffic signal, the illustrated clear vision triangle shall be maintained.

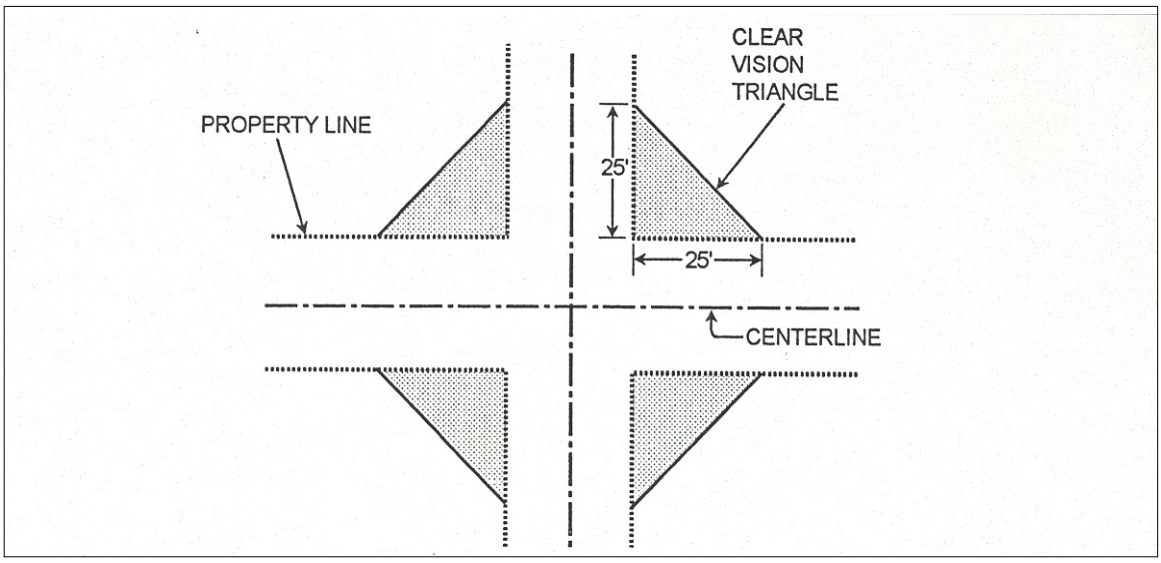

FIGURE 3. VISIBILITY AT INTERSECTIONS: UNCONTROLLED

At any intersection where none of the approaches is controlled by either a stop sign or traffic signal, the illustrated clear vision triangle shall be maintained.

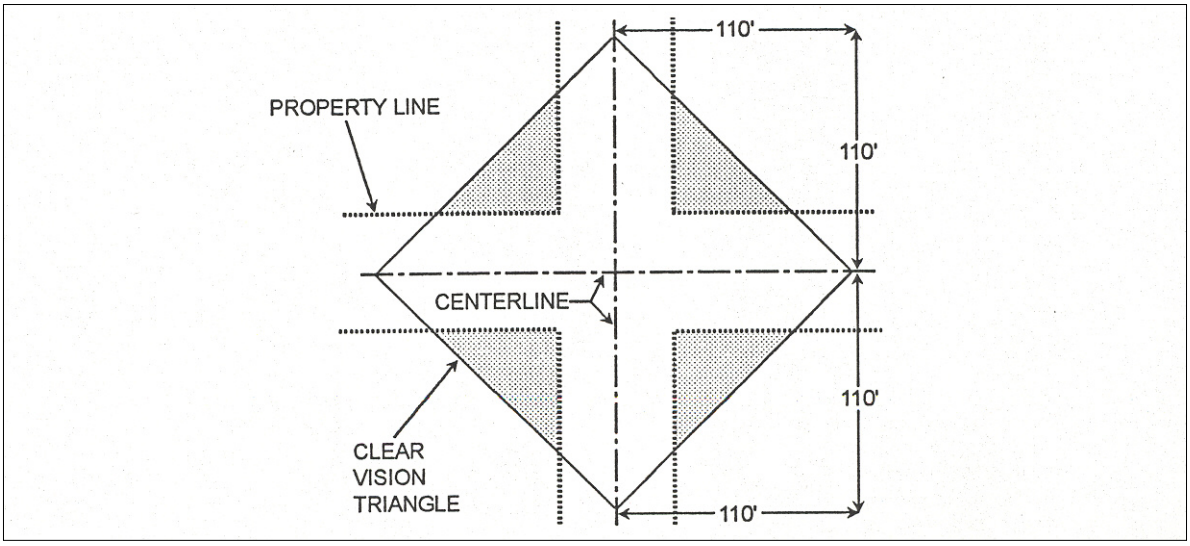


FIGURE 4. WATERCOURSE SETBACKS

Any new structure, addition to an existing structure or similar improvements, located adjacent to a watercourse not delineated with a floodway/floodplain by FEMA, shall either be setback 50' from the watercourse centerline or have a finished floor level which is 2' in elevation above the highest point of the adjacent watercourse bank (See also BMCC Section 27-616).

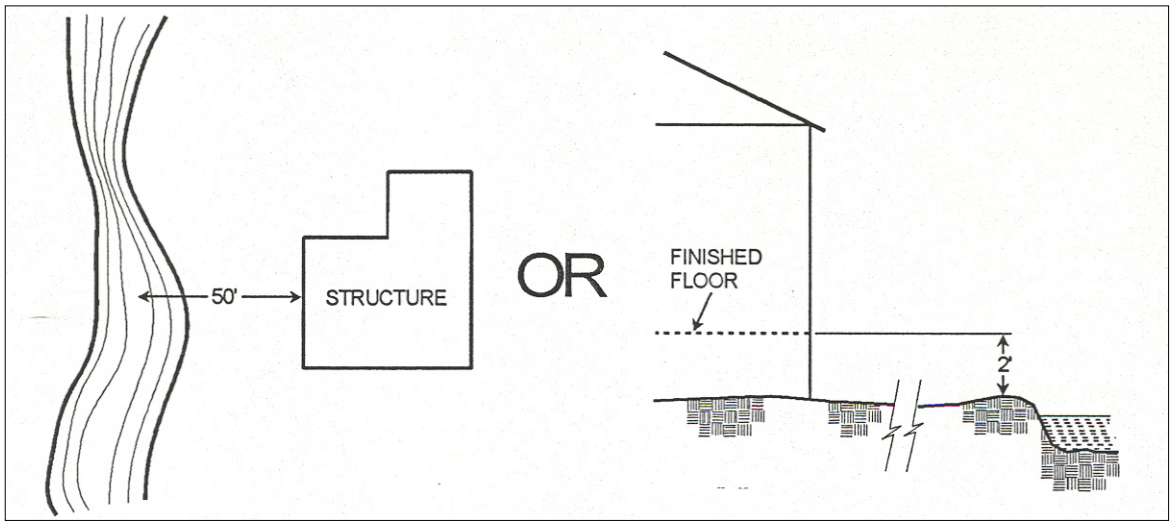

FIGURE 5. ZERO LOT LINES

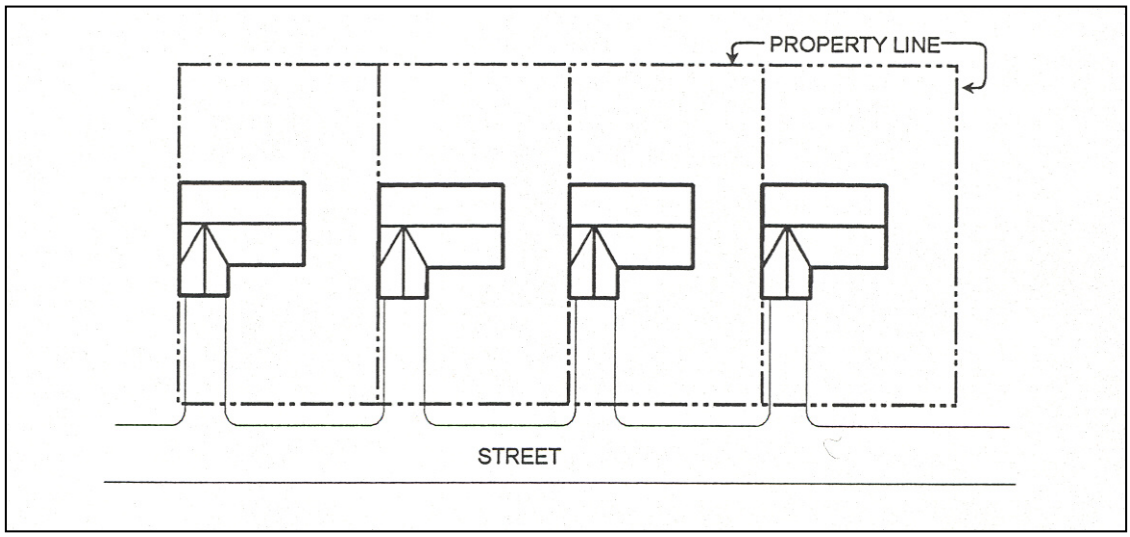


FIGURE 6. FENCE

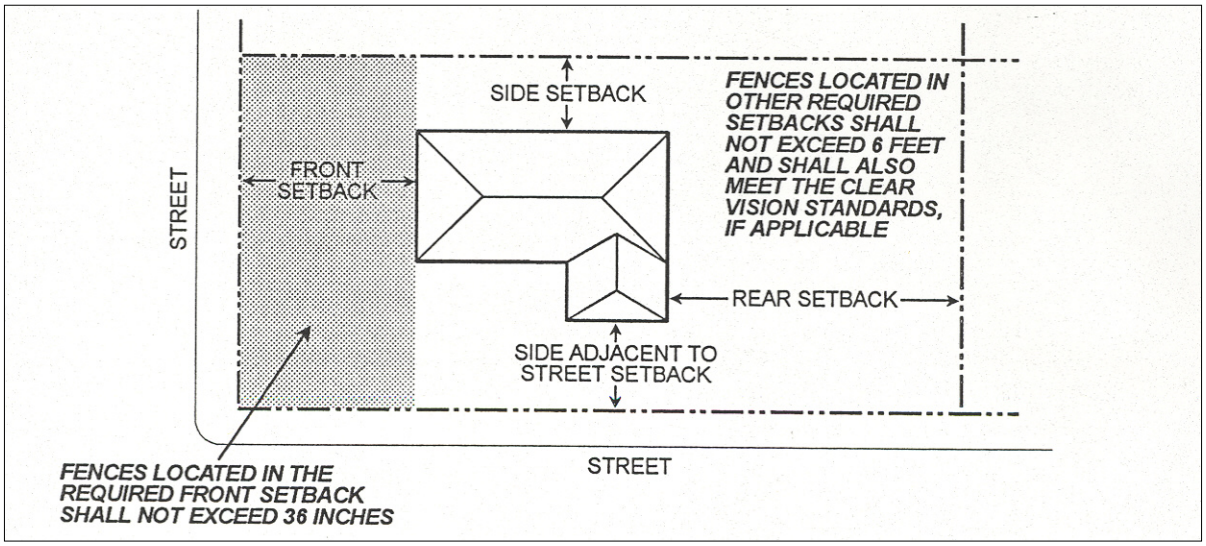

## SEC. 27-619. STANDARDS FOR AMATEUR RADIO ANTENNA SUPPORT STRUCTURES

(a) Definitions. For the purposes of this section, the terms used shall be defined as follows:

(1) **Amateur Radio Antenna**: A ground-, building- or tower-mounted antenna operated by a federally licensed amateur radio operator as part of the Amateur Radio Service, 49 CFR § 97 and as designated by the Federal Communications Commission (FCC).

(2) **Amateur Radio Antenna Support Structure**: Any structure or device specifically designed, constructed and/or erected for the purpose of attaching, mounting or otherwise affixing amateur radio antennae. The term includes the structure and any support thereto.

(3) **Antenna/Tower Antenna Support Structure Height**: The vertical distance measured from the base of the antenna support structure at grade to the highest point of the structure including any attached antennae. If the support structure is on a sloped grade, then the average between the highest and lowest grades shall be used in calculating the antenna height.

(b) General Provisions. All amateur radio towers shall comply with the following requirements:

(1) Amateur radio antenna support structures and antennae shall be located only within the rear yard and shall not be placed within any required setback and shall be located so as to minimize their impact on adjacent residential properties and adjacent rights-of-way while maintaining acceptable signal quality.

(2) Amateur radio antenna support structures and antennae exceeding six (6) feet in height above grade (if ground-mounted) or above the roof or ridge of the building on which they are located (if building-mounted), shall require a building permit. With each building permit, the applicant shall submit evidence as is required to show that the device is adequately anchored, designed and/or constructed so as to safeguard the general public and/or adjacent property from damage in the event of failure of the device.

(3) It is recommended that amateur radio antenna support structures be designed, installed, and maintained so as to blend into the surrounding environment through the use of color and alternative designs, except in instances where the color is dictated by the Federal Aviation Administration (FAA).

(4) In accordance with the FCC's preemptive ruling PRB1, 101 FCC 2d 952 (1985), antenna support structures erected for the primary purpose of supporting amateur radio antennae may exceed the height limitations of the underlying zoning as indicated in section 27-305, BMCC.

(5) Attachments to amateur radio antenna support structures, such as guy wires, shall not cross any property line or any existing or proposed easement.

(6) No lighting shall be permitted on any amateur radio antenna support structures except as mandated by the FAA.

(7) No signage, other than required warning signs, or displays of any type shall be permitted on any amateur radio antenna support structure.

(c) Applicability. All amateur radio antenna support structures and antennae located within the City of Billings and/or the Yellowstone County zoning jurisdiction whether upon private or public lands shall be subject to this section. This section shall apply to amateur radio antenna support structures and antennae upon state and federal lands to the extent of the city's and/or county's jurisdiction by way of law, pursuant to any memoranda of understanding or otherwise. Only the following facilities shall be exempted from the application of this section.

Pre-existing amateur radio antenna support structures or antennae. Pre-existing amateur radio antenna support structures and pre-existing amateur radio antennae shall not be required to meet the requirements of this section, so long as said pre-existing antenna support structures and antennae have received all required approvals, permits and exceptions prior to adoption of this section.

## SEC. 27-620. STANDARDS FOR WIRELESS COMMUNICATION FACILITIES

(a) **Purpose.** The purpose of this section is to establish regulations for the siting of antenna support structures and antennae on public and private property. The goals of this section are to:

(1) Encourage the location of antenna support structures in non-residential areas and minimize the total number of antenna support structures throughout the community;

(2) Strongly encourage the joint use of new and existing antenna support structures;

(3) Require wireless communication facilities to be located, to the extent possible, in areas where the adverse impact on the community is minimal;

(4) Require wireless communication facilities to be configured in a way that minimizes the adverse visual impact of the towers and antennae; and

(5) Enhance the ability of the providers of wireless communication services to provide such services to the community, as quickly, effectively, and efficiently as possible.

(b) **Definitions.**

(1) **Abandoned Antenna Support Structures**: Any antennae or antenna support structures that are not utilized or the provision of wireless communications services for a continuous period of six (6) months shall be considered abandoned.

(2) **Alternative antennae support structure**: An antenna support structure designed to shield, conceal or disguise the presence of antennae or towers and blend with the surrounding setting. Alternative structures may include, but are not limited to, unobtrusive architectural features on new or existing structures, utility poles, clock towers, flagpoles and church steeples. Examples of alternative antenna support structures are illustrated in subsection (o) of this Section.

(3) **Antenna**: Any structure or device used for the purpose of collecting or transmitting electromagnetic waves, including but not limited to directional antennae, such as panels, microwaves dishes, and satellite dishes, and omni-directional antennae, such as whip antennae but not including satellite earth stations.

(4) **Antenna support structure**: Any structure or device specifically designed, constructed and/or erected for the purpose of attaching, mounting or otherwise affixing antennae. Antenna support structures may include, but are not limited to, self-supporting lattice towers, guyed towers, or monopole towers. The term also includes radio and television transmission towers, microwave towers, common-carrier towers, cellular telephone towers, alternative antenna support structures, and the like. The term includes the structure and any support thereto. Types of antenna support structures are illustrated in subsection (o) of this

Section. Land mobile radio and radio and television antenna support structures are regulated under section 27-621 of these regulations.

(5) **Antenna Support Structure Height**: The vertical distance measured from the base of the antenna support structure at grade to the highest point of the structure including any attached antennae. If the support structure is on a sloped grade, then the average between the highest and lowest grades shall be used in calculating the antenna height. The height of roof-mounted antenna support structure height does not include the height of building on which they are mounted.

(6) **Wireless Communication Facility Antenna or Tower Farm**: An antenna or tower farm is a tract of land that contains no more than three (3) antenna support structures within seven hundred fifty (750) linear feet of each other. No antenna support structures located in tower farms shall exceed two hundred fifty (250) feet in height. Legal tracts must be adjacent to each other to be included in this definition.

(7) **Co-location**: The use of a wireless communications facility by more than one wireless communications provider.

(8) **Commercial Wireless Communications Services**: Licensed commercial wireless telecommunication services including cellular, personal communications services (PCS), specialized mobilized radio (SMR), enhanced specialized mobilized radio (ESMR), paging, and similar services that are marketed to the general public.

(9) **Equipment enclosure**: A structure, shelter, cabinet, or vault used to house and protect the electronic equipment necessary for processing wireless communication signals. Associated equipment may include air conditioning, backup power supplies, and emergency generators.

(10) **Wireless Communication Facility**: An unstaffed facility for the transmission and/or reception of radio frequency (RF), microwave or other signals for commercial communications purposes, typically consisting of an equipment enclosure, an antenna support structure and one or more antennae. Amateur radio, land mobile radio, and commercial radio and television facilities are excluded from this definition.

(11) **FAA**: Federal Aviation Administration.

(12) **FCC**: Federal Communications Commission.

(c) **Applicability.** All wireless communication facilities located within the City of Billings and/or the Yellowstone County zoning jurisdiction whether upon private or public lands shall be subject to this section. This section shall apply to wireless communication facilities upon state and federal lands to the extent of the city's and/or county's jurisdiction by way of law, pursuant to any memoranda of understanding or otherwise. Only the following facilities shall be exempted from the application of this section.

(1) Amateur radio stations and antenna support structures (See sections 27-305; 27-306 and 27-619, BMCC.)

(2) Antennae and antenna support structures for land mobile radio and radio and television (See sections 27-305, 27-306 and 27-621 BMCC).

(3) Pre-existing antenna support structures or antennae. Pre-existing antenna support structures and pre-existing antennae shall not be required to meet the requirements of this section, so long as said pre-existing antenna support structures have received all required approvals, permits and exceptions prior to adoption of this section. (See subsection H of this Section.)

(d) **Commercial antenna support structures and antennae located in residential zoning districts.**

(1) Antenna support structures and antennae shall be permitted as an allowed use in all residential zoning districts provided they meet all of the following criteria:

a. Alternative antenna support structures conforming to all applicable provisions of this Code and roof-mounted antennae that do not add more than twenty (20) feet to the total height of the building on which they are mounted shall be permitted as an allowed use only when located on school, government-owned utility, and other government sites.

Proposed antennae or antenna support structures that are contrary to this section are subject to the special review requirements as provided in Sections 27-1503 and 27-1509 of these zoning regulations, or may be submitted to the Board of Adjustment for a hearing, whichever is the preference of the owner/agency. The Board of Adjustment shall hold a public hearing at a time requested by the owner/agency, in accordance with Sections 27-1505(c) or 27-1510(c), BMCC. The Board of Adjustment shall forward comments and recommendations to the affected government agency for their consideration.

b. Antennae co-located on existing or approved alternative antenna support structures or existing or approved antenna support structures that have previously received all required approvals and permits shall be permitted as an allowed use.

(2) Antenna support structures and antennae shall be permitted in the Agricultural-Open Space (AO) zoning district provided the following conditions and all applicable setback, lot coverage, and building (commercial equipment enclosures) height requirements are met:

a. Antenna support structures conforming to all applicable provisions of this Code shall be permitted when:

(1) Located on school, government-owned utility, and government sites and alternative antenna support structures or roof-mounted antennae are used. Proposed antennae or antenna support structures that are contrary to this section are subject to the special review requirements as provided

in Sections 27-1503 and 27-1509 of these zoning regulations, or may be submitted to the Board of Adjustment for a hearing, whichever is the preference of the owner/agency. The Board of Adjustment shall hold a public hearing at a time requested by the owner/agency, in accordance with Sections 27-1505(c) or 27-1510(c), BMCC. The Board of Adjustment shall forward comments and recommendations to the affected government agency for their consideration.

(2) Antenna support structures fifty (50) feet or less in height.

b. Antenna support structures that are greater than fifty (50) feet in height shall be required to obtain special review approval.

c. Antennae co-located on existing or approved alternative antenna support structures or existing or approved antenna support structures that have previously received all required approvals and permits shall be permitted as an allowed use.

d. Wireless communication facility tower farms are permitted by special review.

(e) **Commercial antenna support structures and antennae located in commercial zoning districts**

(1) Alternative antenna support structures shall be permitted as an allowed use in all commercial zoning districts.

(2) Antenna support structures shall be permitted as an allowed use in all commercial zoning districts when located on school, government-owned utility, and other government sites.

Proposed antennae or antenna support structures that are contrary to this section are subject to the special review requirements as provided in Sections 27-1503 and 27-1509 of these zoning regulations, or may be submitted to the Board of Adjustment for a hearing, whichever is the preference of the owner/agency. The Board of Adjustment shall hold a public hearing at a time requested by the owner/agency, in accordance with Sections 27-1505(c) or 27-1510(c), BMCC. The Board of Adjustment shall forward comments and recommendations to the affected government agency for their consideration.

(3) Antennae co-located on existing alternative antenna support structures or existing antenna support structures which have previously received all required approvals and permits shall be permitted as an allowed use in all commercial zones.

(4) Antenna support structures and antennae located in Residential Professional (RP), Neighborhood Commercial (NC), and Entryway Mixed Use (EMU) that do not meet the requirements of subsections 1, 2, and 3 shall be required to obtain special review approval. Wireless communication facility tower farms are not allowed in these zoning districts.

(5) New antenna support structures erected in the Medical Corridor shall be required to follow the permit zoning approval procedures in Section 27-901, BMCC. Antennae may be placed on existing antenna support structures and alternative antenna support structures that have previously received all required approvals and permits and meet the provisions and requirements of these regulations, without obtaining permit zoning approval.

(6) Antenna support structures and antennae located in Community Commercial (CC), Highway Commercial (HC), Controlled Industrial (CI), South 27th Street, Central Business District (CBD), Entryway Light Commercial (ELC), Entryway General Commercial (EGC), Entryway Light Industrial (ELI) and Public (P) zoning districts shall be permitted as an allowed use provided that the towers meet the requirements subsections 1, 2, and 3, or:

a. Roof-mounted antenna that do not add more than twenty (20) feet to the total height of the building on which it is mounted shall be permitted as an allowed use. See additional requirements for roof-mounted antenna in (g)(10)b. of this section.

b. Antenna support structures fifty (50) feet in height or less shall be permitted as an allowed use.

c. Antenna support structures that are greater than fifty (50) feet in height shall be required to obtain special review approval.

d. Wireless communication facility tower farms are permitted with special review approval, except in the CBD and South 27th Street zoning districts.

(7) All antenna support structures located in Heavy Industrial (HI) shall be permitted as an allowed use, including tower farms.

(f) **Antenna support structures located in parks.** The presence of certain wireless communication facilities may conflict with the purpose of some city and county owned parks. Wireless communication facilities will be considered only following a recommendation by the City-County Planning Department; the City Parks, Recreation, and Cemetery Advisory Board or County Parks Board, and approved by the City Council or County Commission. Factors that will be considered include:

(1) Public parks of a sufficient scale and character that are adjacent to an existing commercial or industrial use;

(2) Commercial recreation areas and major playfields; and,

(3) Park maintenance facilities.

(g) **General requirements.** The requirements set forth in this section shall govern the location and construction of all wireless communications facilities governed by this section.

(1) *Building codes and safety standards.* To ensure the structural integrity of wireless communication facilities, the owner of a facility shall ensure that it is maintained in compliance with standards contained in applicable local building

codes and the applicable standards for such wireless communication facilities, as amended from time to time.

(2) *Regulatory compliance.* All wireless communication facilities must meet or exceed current standards and regulations of the FAA, the FCC, and other local, state or federal agencies with the authority to regulate facilities governed by this ordinance. All wireless communication facilities must comply with all revised standards and regulations within the date established by the agency promulgating the standards or regulations.

(3) *Setbacks:*

a. Antenna support structures adjacent to residential uses or zoning. Antenna support structures must be set back, from all property lines, a distance equal to one-half (½) the height of the structure from any off-site residential structure or residentially zoned lot. Accessory structures must maintain a minimum of a fifteen (15) foot setback from any lot line adjacent to a residential structure or residentially zoned lot, or the required setback of the zoning district where the antenna support structure is located, whichever is greater.

b. Commercial and industrial zoning setbacks. Antenna support structures and accessory facilities must meet the minimum yard setback requirements, including arterial setbacks, for the zoning district in which they are located.

(4) *Lot coverage and height:* Antenna support structures and accessory structures shall not exceed lot coverage requirements for the zoning district in which they are located. Accessory structures shall not exceed the height restrictions for the zoning district in which they are located.

(5) *Fencing and buffering.*

a. Fencing. A chain link or solid wood fence, or masonry wall at least six (6) feet in height (eight (8) feet if razor or barbed wire is to be used) shall be constructed and maintained around the perimeter of the antenna support structure site. Climb-proof shields can be substituted for a fence or wall around the structure. Solid fences, at least six (6) feet in height, are required adjacent to residential uses and residentially zoned property.

b. Landscaping. For all facilities the following will be required: a continuous evergreen hedge at least four (4) feet in height when planted, shall be planted and maintained around the perimeter of the antenna support structure outside of the required fencing and spaced close together to provide a continuous visual screen. Shrubs shall also be planted and maintained around the guy anchors for visual screening purposes.

A performance bond or letter of credit for one hundred fifty percent (150%) of the landscaping and fencing materials and labor costs shall be posted with the Planning Department, prior to building permit approval,

to ensure the placement of required landscaping and fencing in accordance with Section 27-1110, BMCC.

c. *Commercial landscaping*. Landscaping requirements shall not apply to antenna support structures located in the Heavy Industrial (HI) zoning district.

d. *Exceptions for City Airport Airfield Area*. If federal safety and security standards within the city airport's airfield area prevent an antenna support structure from being fenced or landscaped, items (5)(a) and (5)(b) will not apply. Documentation of these standards must be submitted with the building permit or special review applications.

(6) *Lighting*. Antenna support structures shall not be artificially lighted unless required by the FAA or other local, state, or federal agency. If the FAA requires safety lighting, the use of red beacons is preferred to flashing strobe lights. Security lighting on site may be mounted up to twenty (20) feet high on the tower, and shall be directed towards the ground to reduce light pollution, prevent off-site light spillage, and avoid illuminating the tower. Cut-off security lighting must be used adjacent to residential uses or residentially zoned lots. When incorporated into the approved design of the facility, light fixtures used to illuminate sports fields, parking lots, or similar areas may be included in the facility.

(7) *Signage.* Signage shall be limited to non-illuminated warning and equipment identification signs.

(8) *Co-location*.

a. Antenna support structures should be designed in all respects to accommodate both the applicant's antennae and antennae for at least two (2) additional comparable antennae if the antenna support structure is over one hundred (100) feet in height or for at least one (1) additional comparable antennae if the tower is between fifty (50) feet and one hundred (100) feet in height.

b. All new antennae must co-locate on existing or approved antenna support structures or alternative antenna support structures unless it can be demonstrated co-location is not feasible as provided for in (k)(7) of this section**.**

(9) *Maintenance.*

a. Equipment at a wireless communication facility shall be automated to the greatest extent possible to reduce traffic and congestion. Where the site abuts or has access to a collector or local street, access for maintenance vehicles shall be exclusively by means of the collector or local street.

b. All property used for the siting of an antenna support structure or antenna shall be maintained, without expense to the city and/or county,

so as to be safe, orderly, attractive, and in conformity with city and/or county codes including those regarding the removal of weeds, trash, and landscape maintenance.

(10) *Visual impact/aesthetics.*

a. Wireless communication facilities shall either maintain a galvanized steel finish or, subject to any applicable standards of the FAA or other applicable local, state, or federal agency, be painted a neutral color or painted and/or textured to match the existing structure so as to reduce visual obtrusiveness.

b. If an antenna is installed on a structure other than a tower, the antenna and associated electrical and mechanical equipment must be of a neutral color that is identical to, or closely compatible with, the color of the supporting structure so as to make the antenna and related equipment as visually unobtrusive as possible. Antennae and antenna support structures may be mounted on existing buildings that are thirty (30) feet or more in height above the street grade.

c. Roof-mounted antennae and antenna support structures shall not add more than twenty (20) feet to the total height of the building on which they are mounted. Roof-mounted equipment shall be made visually unobtrusive to match existing air conditioning units, stair, elevator towers or other architectural elements. Only monopole antennae support structures with omni-directional (whip) or low profile single-directional (panel) shall be installed on building roofs. Examples of acceptable designs are shown in subsection (o) of this section. Crow's nest antennae arrays are prohibited on roof-top structures.

d. Wireless communication facilities attached to new or existing structures shall be designed to blend with the structure's architecture and should be placed directly above, below or incorporated with vertical design elements of a structure.

e. Wireless communication facilities shall be located as to minimize their visibility and not be placed within historic or scenic view corridors as designated by the Billings City Council or the Yellowstone County Commission, or by any state or federal law or agency.

(11) *Antenna support structure separation.* All antenna support structures over fifty (50) feet in height, regardless of the zoning district in which the structure is located, shall be located at least one (1) mile from any other antenna support structure that is over fifty (50) feet. Up to three (3) antenna support structures located within an approved wireless communication facility tower farm shall be located at least one (1) mile from any other tower farm.

Exceptions to the terms of subsection (g)(11) may be granted by the governing body during the special review process when it is found that no existing or approved antenna support structure within the required separation distance of

the proposed site can accommodate the applicant's proposed antenna or a critical need exists for the proposed location and it is technically infeasible to locate or co-locate structures at or beyond the required separation distance.

(h) *Nonconforming wireless communication facilities*. Antenna support structures and/or facilities in existence on the date of the adoption of these regulations, that do not comply with the requirements of these regulations, (nonconforming antenna support structures) are subject to the following provisions:

(1) Nonconforming antenna support structures may continue their present use, but may not be expanded or increased in height without complying with these regulations, except as further provided in this section.

(2) Nonconforming antenna support structures which are hereafter damaged and destroyed, by less than fifty (50) percent of its replacement value, due to any reason or cause may be repaired and restored to their former use, location, and physical dimensions subject to obtaining a building permit and other necessary approvals thereof, but without otherwise complying with these regulations. If an antenna support structure is destroyed or damaged by more than fifty (50) percent of its replacement the antenna support structure must be brought into compliance with these regulations.

(3) The owner of any nonconforming antenna support structure may make minor modifications in order to improve the structural integrity of the facility, to allow the facility to accommodate co-located antennae or facilities, or to upgrade the facilities to current engineering, technological or communications standards, without having to conform to the provisions of these regulations.

(i) *Modifications of existing wireless communication facilities that meet the requirements of these regulations.*

(1) *Minor modifications*. Minor modifications to facilities permitted under these regulations shall be approved by the City-County Planning Department so long as they comply with the original approved design. Minor modifications are as follows: the addition of more antenna arrays to any existing antenna support structure, so long as the addition of the antenna arrays add no more than twenty (20) feet in height to the facility and the increase in height of the support structure is no greater than ten (10) percent. Placement of additional antennae, up to the number the antenna support structure was originally designed to accommodate, shall be considered a minor modification.

(2) *Major modifications*. Major modifications to antenna support structures permitted under these regulations shall be approved through a special review. Major modifications are any that exceed the definition of minor modifications.

(j) *Abandonment.* Wireless communications facilities will be considered abandoned if they are unused by all providers at the facility for a period of six (6) months. Determination of abandonment shall be made by the City-County Planning Department, which shall have the right to request documentation from the facility owner regarding

support or antenna usage. Upon abandonment, the facility owner shall have ninety (90) days to:

1. Re-use the facility, or transfer the facility to another owner who will re-use it; or
2. Dismantle the facility. If the facility is not removed within ninety (90) days of abandonment, the city and/or county may remove the facility at the facility and/or property owner's expense. If the facility is removed, city and/or county approval of the facility will expire.

If the facility owner is unable to remove the facility within the ninety (90) days due to unusual circumstances, the City-County Planning Department may grant the facility owner an additional ninety (90) days in which to comply with the requirements of this section.

(k) *Special Review submittal requirements.* The applicant of new wireless communication facilities shall provide the following documentation for review by the City-County Planning Department:

(1) A map to scale showing the service area of the proposed wireless communication facility and an explanation of the need for that facility.

(2) A site/landscaping plan showing the following items:

a. North arrow.

b. The location and dimensions of all vehicular points of ingress and egress, drives, alleys and streets.

c. Property boundaries and lot line dimensions.

d. The locations and dimensions of all existing and proposed buildings, structures, and improvements including those that will be removed. All information must be labeled.

e. Setbacks from all property boundaries for existing and proposed structures and buildings.

f. Centerline and names of major and minor arterial streets relevant to the application.

g. Elevation drawing of proposed wireless communication facility including the antenna support structure, antenna platforms and associated equipment enclosures. Also indicate the maximum number of antenna platforms that can be supported.

h. Detailed landscaping plan of the site.

i. Location of artificial light sources and the areas of illumination.

j. Applications for tower farms shall include items a. through i. of this subsection (k)(2) and an overall development plan showing the location of future structures and equipment enclosures.

k. Latitude, longitude and height of proposed antenna support structures.

l. Other pertinent features as determined by the Zoning Coordinator or Development Review Committee.

(3) Area map showing the property boundaries of adjacent property and the location of existing buildings.

(4) Inventory of existing and approved sites. Each applicant for one or more antenna support structure shall provide to the City-County Planning Department a map showing the locations and service area of existing and approved antenna support structures operated or utilized by the applicant, including specific information on the location, height, and design of each antenna support structure. The City-County Planning Department shall maintain an inventory of existing and approved antenna support structures, including specific information about the location, height, and design of each antenna support structures. The city may share such information with other persons, organizations or governmental authorities.

(5) Documentation of minimum light requirements from the FAA or other local, state or federal agency for the antenna support structure and/or antennae. Where applicable, applicant will provide documentation of the FAA airspace review and a copy of comments from the FAA.

(6) When the applicant is a wireless service provider, proof that the applicant is licensed by the FCC to provide the wireless communication services that the proposed facility is designed to support.

(7) Availability of suitable existing or approved antenna support structures. No new antenna support structure shall be permitted unless the applicant clearly demonstrates, in writing, to the reasonable satisfaction of the City-County Planning Department that no existing or approved antenna support structure within the required separation distance of the proposed site can accommodate the applicant's proposed antenna. Closer separation distances may be approved if the applicant clearly demonstrates a critical need for the alternative location and the infeasibility of locating or co-locating wireless communication facility at or beyond the required separation distance. Evidence submitted to demonstrate that no existing or approved structure can accommodate the applicant's proposed antenna must include a discussion of the following items, if relevant.

a. No existing or approved antenna support structures are located within the geographic area required to meet the applicant's engineering requirements.

b. Existing or approved antenna support structures are not of sufficient height to meet the applicant's engineering requirements.

c. Existing or approved antenna support structures do not have sufficient structural strength to support the applicant's proposed antenna and related equipment and cannot be reinforced to provide sufficient structural strength.

d. The applicant's proposed antenna would cause electromagnetic interference with the antenna on the existing or approved antenna support structures, or the antenna on the existing or approved antenna support structures would cause interference with the applicant's proposed antenna.

e. The fees or costs required to share an existing or approved antenna support structure or to adapt an existing or approved antenna support structures for sharing are unreasonable. Costs below new tower development are presumed reasonable.

f. Property owners or owners of existing or approved antenna support structures are unwilling to accommodate the applicant's needs.

g. The applicant demonstrates that there are other limiting factors that render existing or approved antenna support structures unsuitable.

(8) Co-location agreement. If co-location is feasible, the owner of the antenna support structure shall certify, prior to permit approval, that the owner will accept for co-location any FCC licensed wireless communication provider using compatible technology on commercially reasonable terms up to the antenna support structure's capacity to accommodate additional antennae. The applicant shall also include a statement on how requests for co-locators will be processed.

(9) Effect of surrounding property values. The applicant must submit information that substantiates there will be no adverse effects on surrounding property values resulting from the proposed facility.

(l) Special review uses.

(1) A request for a special review shall be initiated by application to the City-County Planning Department and handled in accordance with the special review procedure provided in section 27-1503 and 27-1509 of these zoning regulations. The Billings City Council or Yellowstone County Commission may issue special review approval under these sections provided they have determined that the requirements of these regulations have been satisfied and, further, that the benefits of and need for the proposed wireless communication facilities are greater than possible depreciating effects and damage to neighboring properties.

(2) In granting special review approval, the Billings City Council or Yellowstone County Commission may impose additional conditions to the extent determined necessary to buffer or otherwise minimize adverse effects of the proposed wireless communication facilities on surrounding properties.

(3) Expiration of special review approval.

a. A building permit must be applied for within six (6) months of special review approval and the project shall be completed within one (1) year from the date the special review is granted by the City Council or County Commission. For the purpose of these regulations, the term standard of construction shall be defined as the installation of a

permanent foundation for the antenna support structure. The City Council and/or County Commission may grant one (1) six (6) month extension of the period to start construction upon written request by the applicant.

b. The City Council or County Commission shall not approve an extension unless the development plan is brought into conformance with any relevant zoning regulations that have been amended subsequent to the original approval and unless the applicant provides adequate evidence that construction is able to begin within the time period sought. This evidence shall include, but not be limited to, the acquisition of any or all required government approvals and project financing, the City Council or County Commission may as a condition of approval of a special review establish the period of time such special review may remain in effect.

(m) Appeals. Appeals from any decision of the City-County Planning Department may be taken by any person aggrieved or any official of the city or county affected by the decision of the City-County Planning Department. Such appeal shall be to the City and/or County Board of Adjustment pursuant to Section 27-1506 or Section 27-1511 of the City of Billings and Yellowstone County Unified Zoning Regulations.

(n) Nuisances. Wireless communication facilities, including, without limitation, power source, ventilation and cooling, shall be operated at all times within the city and/or county noise regulations, shall not be operated so as to cause the generation of heat that adversely affects a building occupant and shall not be maintained or operated in such a manner as to be a nuisance.

(o) Wireless Communication Facilities. Illustrated examples.

(1) Alternative Antenna Support Structures

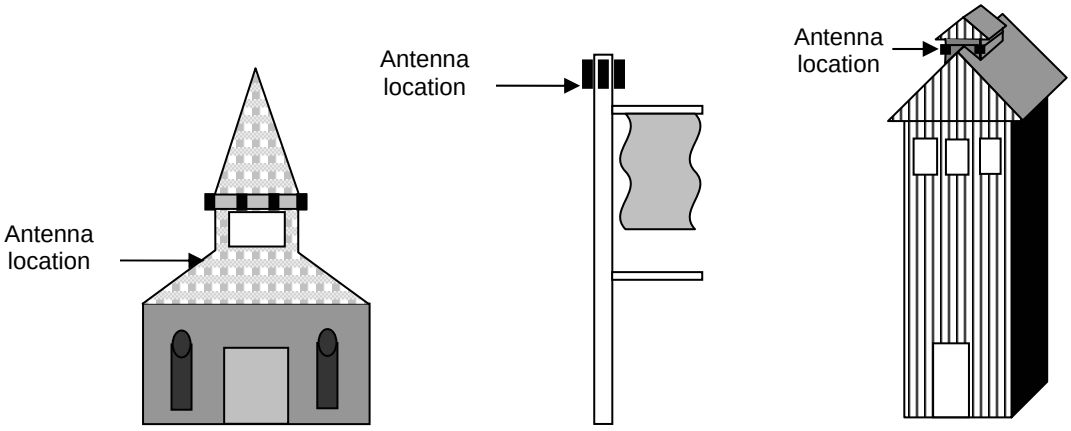


Church steeple Flagpole Grain elevator

Antenna location

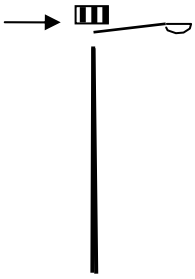

Light fixture

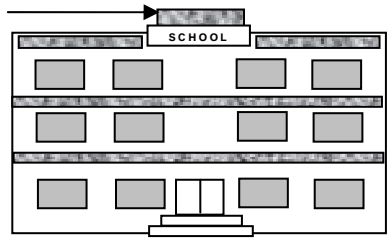


Existing building

(2) Antenna Support Structures

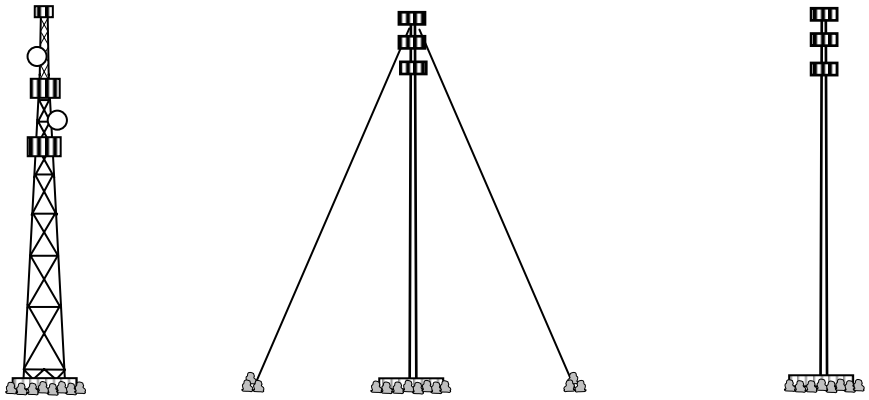

(3) 3. Roof-mounted Antenna Support Structures and Antennae

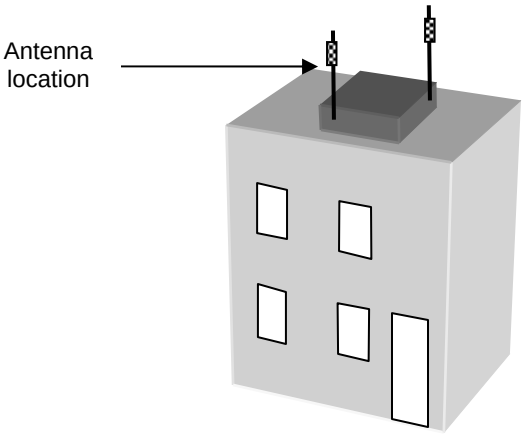

## SEC. 27-621 STANDARDS FOR LAND MOBILE RADIO AND RADIO AND TELEVISION BROADCAST ANTENNAE AND ANTENNA SUPPORT STRUCTURES

(a) *Purpose.* The purpose of this section is to establish regulations for the siting of broadcast facilities, including land mobile radio services and radio and television broadcast antennae, antenna support structures and associated equipment and buildings on public and private property. The goals of this section, developed with the assistance and participation of the Broadcast and Land Mobile Radio industry in Yellowstone County, are to:

(1) Encourage the location of broadcast facilities in non-residential areas and minimize the total number of antenna support structures throughout the community;

(2) Strongly encourage the joint use of new and existing broadcast antenna support structures;

(3) Require broadcast facilities to be located, to the extent possible, in areas where the adverse impact on the community is minimal;

(4) Require broadcast facilities to be configured in a way that minimizes the adverse visual impact of antenna support structures and antennae; and

(5) Enhance the ability of the providers of land mobile radio services and radio and television broadcast services to provide such services to the community, as quickly, effectively, and efficiently as possible.

(b) *Definitions.* For the purposes of this section, the terms used shall be defined as follows:

(1) **AM**: Amplitude-modulated broadcasting in the frequency band 535-1, 705 Kilohertz.

(2) **Antenna/ antenna support structure height**: The vertical distance measured from the base of the antenna support structure at grade to the highest point of the structure including any attached antennae. If the support structure is on a sloped grade, then the average between the highest and lowest grades shall be used in calculating the antenna height.

(3) **Broadcast antenna**: A ground-, building- or tower-mounted antenna operated as a land mobile radio service or as a broadcast radio and/or television service as defined by the Federal Communications Commission (FCC) under Code of Federal Regulations and subsequent title amendments;

– Title 47, PART 90 (47 CFR § 90) – PRIVATE LAND MOBILE RADIO SERVICES,

– Title 47, PART 73 (47 CFR § 73) - RADIO BROADCAST SERVICES, which includes AM, FM, and Television Services, and

– Title 47, PART 74 (47 CFR § 74) - EXPERIMENTAL RADIO, AUXILIARY, AND SPECIAL BROADCAST AND OTHER PROGRAM DISTRIBUTIONAL SERVICES.

(4) **Broadcast antenna support structure**: Any structure or device specifically designed, constructed and/or erected for the purpose of attaching, mounting or otherwise affixing antennae. Antenna support structures may include, but are not limited to, self-supporting lattice towers, guyed towers, or monopole towers. In this section, the term applies to land mobile radio service and broadcast radio and television transmission antenna support structures. The term includes the structure and any support thereto.

(5) **Broadcast antenna or tower farm:** A tract of land that contains three (3) or more broadcast or land mobile radio service antenna support structures, any two are spaced no more than seven hundred fifty (750) linear feet of each other. Legal tracts must be adjacent to each other to be included in this definition. The term is inclusive of all antenna support structures, equipment enclosures, buildings and any additions thereto.

(6) **Broadcast facilities** An unstaffed facility for the transmission and/or reception of radio signals for communications purposes, typically consisting of an equipment building or enclosure, an antenna support structure and one or more antennae. This definition applies exclusively to land mobile radio fixed systems, and radio and television broadcast transmission facilities.

(7) **FAA**: Federal Aviation Administration.

(8) **FCC**: Federal Communications Commission.

(9) **Land Mobile Radio Service (LMRS):** A mobile service between base stations and land mobile stations or between land mobile stations as defined in Title 47, PART 90 (47 CFR § 90) – Private Land Mobile Radio Services.

(c) *Applicability*. All land mobile radio service and radio and television broadcast antenna and antenna support structures located within the City of Billings and/or the Yellowstone County zoning jurisdiction whether upon private or public lands shall be subject to this ordinance/resolution. This ordinance/resolution shall apply to broadcast antenna and antenna support structures upon state and federal lands to the extent of the city's and/or county's jurisdiction by way of law, pursuant to any memoranda of understanding or otherwise.

Pre-existing land mobile radio and radio and television broadcast antenna support structures and antennae shall not be required to meet the requirements of this ordinance/resolution, except as provided under section 27-621 G, "Nonconforming broadcast facilities".

(d) *Broadcast antenna support structures and antennae located in residential zoning districts.*

(1) Land mobile radio and radio and television broadcast antenna support structures and antennae shall be permitted as an allowed use in all residential zoning districts provided they meet all of the following criteria:

a. Alternative broadcast antenna support structures conforming to all applicable provisions of this Code and roof-mounted antennae that do not add more than twenty (20) feet to the total height of the building on which it is mounted shall be permitted as an allowed use only when located on school, government-owned utility, and other government sites. Proposed antennae or antenna support structures that are contrary to this section are subject to the special review requirements as provided in Sections 27-1503 and 27-1509 of these zoning regulations, or may be submitted to the Board of Adjustment for a hearing, whichever is the preference of the owner/agency. The Board of Adjustment shall hold a public hearing at a time requested by the owner/agency, in accordance with Sections 27-1505(c) or 27-1510(c), BMCC. The Board of Adjustment shall forward comments and recommendations to the affected government agency for their consideration.

b. Antennae co-located on existing or approved alternative broadcast antenna support structures or existing or approved broadcast antenna support structures, which have previously received, all required approvals and permits shall be permitted as an allowed use.

(2) Broadcast antenna support structures and antennae shall be permitted in the agricultural-open space (AO) zoning district provided the following conditions and all applicable setback, lot coverage, and building (commercial equipment enclosures) height requirements are met:

a. Broadcast antenna support structures conforming to all applicable provisions of this Code shall be permitted when:

(1) Located on school, government-owned utility, and government sites and alternative antenna support structures or roof-mounted antennae are used. Proposed antennae or antenna support structures that are contrary to this section are subject to the special review requirements as provided in Sections 27-1503 and 27-1509 of these zoning regulations, or may be submitted to the Board of Adjustment for a hearing, whichever is the preference of the owner/agency. The Board of Adjustment shall hold a public hearing at a time requested by the owner/agency, in accordance with Sections 27-1505(c) or 27-1510(c), BMCC. The Board of Adjustment shall forward comments and recommendations to the affected government agency for their consideration.

(2) Broadcast antenna support structures fifty (50) feet or less in height.

b. Broadcast antenna support structures that are greater than fifty (50) feet in height shall be required to obtain special review approval.

c. Broadcast antennae co-located on existing or approved alternative broadcast antenna support structures or existing or approved broadcast antenna support structures that have previously received all required approvals and permits shall be permitted as an allowed use.

d. Broadcast antenna or tower farms are permitted by special review.

(e) Broadcast antenna support structures and antennae located in commercial zoning districts.

(1) Broadcast antenna support structures fifty (50) feet in height or less shall be permitted as an allowed use.

(2) Broadcast antenna support structures that exceed 50 feet in height or the maximum height limitations in the underlying commercial and industrial zoning districts as indicated in section 27-306, BMCC (whichever is greater) are permitted by special review.

(3) Broadcast antenna or tower farms are permitted by special review, except in the CBD and South 27th Street zoning districts.

(4) All broadcast antenna support structures located in heavy industrial (HI) shall be permitted as an allowed use, including broadcast antenna or tower farms.

(5) All broadcast facilities located within the boundaries of an approved or preexisting broadcast antenna or tower farm shall be permitted as an allowed use.

(f) *General requirements*. The requirements set forth in this section shall govern the location and construction of all land mobile radio service and radio and television transmission facilities governed by this section.

(1) Building codes and safety standards. To ensure the structural integrity of broadcast facilities, the owner of a facility shall ensure that it is maintained in compliance with standards contained in applicable local building codes and the applicable standards for such facilities.

(2) Regulatory compliance. All broadcast facilities must meet current standards and regulations of the FAA, the FCC, and other local, state or federal agencies with the authority to regulate facilities governed by this section.

(3) *Setbacks*:

a. Broadcast antenna support structures adjacent to residential uses or zoning. Broadcast antenna support structures must be set back, from all property lines, a distance equal to one-half (½) the height of the structure from any off-site residential structure or residentially zoned lot. Accessory structures, such as equipment enclosures or transmitter buildings, must maintain a minimum of a fifteen (15) foot setback from any lot line adjacent to a residential structure or residentially zoned lot, or the required setback of the zoning district where the antenna support structure is located, whichever is greater.

b. Commercial and industrial zoning setbacks: Broadcast antenna support structures and accessory facilities must meet the minimum yard setback requirements, including arterial setbacks, for the zoning district in which they are located.

c. Broadcast facilities in broadcast antenna or tower farms: Antenna support structures and accessory facilities located in antenna or tower farms must meet the minimum yard setback requirements, including arterial setbacks, for the zoning district in which they are located.

(4) *Lot coverage and height*: Broadcast antenna support structures and accessory structures shall not exceed lot coverage requirements for the zoning district in which they are located. Building and equipment enclosures shall not exceed the height restrictions for the zoning district in which they are located.

(5) *Fencing and buffering*.

a. Fencing. A chain link or solid wood fence, or masonry wall at least six (6) feet in height (eight (8) feet if razor or barbed wire is to be used) shall be constructed and maintained around the perimeter of the broadcast antenna support structure site. Climb-proof shields can be substituted for a fence or wall around the structure. Solid fences, at least six (6) feet in height are required adjacent to residences and residentially zoned property. All AM broadcast antenna support structures must be surrounded by a suitable fence as required by FCC regulations.

b. Landscaping adjacent to residential uses and/or residential zoning. For broadcast facilities located in a residential zoning district, adjacent to a residential use, or adjacent to a residentially zoned parcel, the following will be required: a continuous evergreen hedge at least four (4) feet in height when planted, shall be planted and maintained around the perimeter of the antenna support structure outside of the required fencing and spaced close together to provide a continuous visual screen. Shrubs shall also be planted and maintained around the guy anchors for visual screening purposes. AM Broadcast stations are exempt from this requirement due to overriding FCC regulations regarding vegetation in ground radial systems.

A performance bond or letter of credit for one hundred fifty percent (150%) of the landscaping and fencing materials and labor costs shall be posted with the Planning Department to ensure the placement of required landscaping and fencing in accordance with Section 27-1110, BMCC.

c. *Commercial landscaping*. Landscaping requirements shall not apply to broadcast antenna support structures located in Agricultural-Open Space, commercial or industrial zoning districts or approved broadcast antenna or tower farms.

d. *Exceptions for City Airport Airfield Area.* If federal safety and security standards within the city airport's airfield area prevent a broadcast antenna support structure from being fenced or landscaped, items (5)(a) and (5)(b) will not apply. Documentation of these standards must be submitted with the building permit or special review applications.

(6) *Lighting.* Broadcast antenna support structures shall not be artificially lighted unless required by the FAA or other local, state, or federal agency. Security lighting may be placed on a support structure no higher than twenty feet above ground. Cut-off security lights must be used in or adjacent to residential areas to prevent light spillage onto adjacent property.

(7) *Signage.* Signage shall be limited to non-illuminated warning and equipment identification signs unless otherwise required by the FAA and/or FCC.

(8) *Maintenance.*

a. Equipment at a broadcast facility shall be automated to the greatest extent possible to reduce traffic and congestion. Where the site abuts or has access to a collector or local street, access for maintenance vehicles shall be exclusively by means of the collector or local street.

b. All property used for the siting of a broadcast antenna support structure or antenna shall be maintained, without expense to the city and/or county, so as to be safe, orderly, attractive, and in conformity with city and/or county codes including those regarding the removal of weeds, trash and landscape maintenance.

(9) *Visual impact/aesthetics.*

a. Broadcast antenna support structures shall either maintain a galvanized steel finish or, subject to any applicable standards of the FAA or other applicable local, state, or federal agency, be painted a neutral color or painted and/or textured to match the existing structure so as to reduce visual obtrusiveness.

b. If a broadcast antenna is installed on a structure other than a tower, the associated electrical and mechanical equipment must be of a neutral color that is identical to, or closely compatible with, the color of the supporting structure so as to make the related equipment as visually unobtrusive as possible. Broadcast antennae and antenna support structures may be mounted on existing buildings that are thirty (30) feet or more in height above the street grade.

c. Roof-mounted antennae and antenna support structures shall not add more than twenty (20) feet to the total height of the building on which they are mounted. Roof-mounted equipment shall be made visually unobtrusive to match existing air conditioning units, stair, elevator towers or other background. Crow's nest antennae arrays are prohibited on rooftop structures.

d. Broadcast antenna or antenna support structures attached to new or existing structures shall be designed to blend with the structure's architecture and should be placed directly above, below or incorporated with vertical design elements of a structure.

(g) *Nonconforming broadcast facilities.* Broadcast facilities in existence on the date of the adoption of these regulations that do not comply with the requirements of these regulations, are subject to the following provisions:

(1) Nonconforming broadcast facilities may continue their present use, but may not be expanded without complying with these regulations, except as further provided in this section.

(2) Nonconforming broadcast antenna support structures which are hereafter damaged and destroyed, by less than fifty (50) percent of its replacement value, due to any reason or cause may be repaired and restored to their former use, location, and physical dimensions subject to obtaining a building permit and other necessary approvals thereof, but without otherwise complying with these regulations. If a broadcast antenna support structure is destroyed or damaged by fifty (50) percent or more of its replacement the broadcast antenna support structure must be brought into compliance with these regulations.

(3) The owner of any nonconforming broadcast antenna support structure may make minor modifications in order to improve the structural integrity of the structure, to allow the structure to accommodate co-located antennae, or to upgrade the facilities to current engineering, technological or communications standards, without having to conform to the provisions of these regulations.

(h) *Modifications of existing or broadcast facilities that meet the requirements of these regulations.*

(1) *Minor modifications*. Minor modifications to facilities permitted under these regulations shall be approved by the City-County Planning Department so long as they comply with the original approved design. Minor modifications are as follows:

a. The addition of one or more antenna arrays to any existing antenna support structure, so long as the addition of the antenna arrays add no more than twenty (20) feet in height to the facility and the increase in height of the support structure is no greater than ten (10) percent.

b. Placement of additional antennae, up to the number the antenna support structure was originally designed to accommodate, shall be considered a minor modification.

c. Repairs to or replacement of existing antennae or feedlines or support members (such as guy wires) are not considered modifications under this part.

(2) *Major modifications.* Major modifications to antenna support structures permitted under these regulations shall be approved through a special review. Major modifications are any that exceed the definition of minor modifications.

(i) *Abandonment.* Broadcast facilities will be considered abandoned if they are unused by all providers at the facility for a period of six (6) months. Determination of abandonment shall be made by the City-County Planning Department which shall have the right to request documentation from the facility owner regarding support or antenna usage. Upon abandonment, the facility owner shall have ninety (90) days to:

(1) Re-use the facility or transfer the facility to another owner who will re-use it;

or

(2) Dismantle the facility. If the facility is not removed within ninety (90) days of abandonment, the city and/or county may remove the facility at the facility and/or property owner's expense. If the facility is removed, city and/or county approval of the facility will expire. If the facility owner is unable to remove the facility within the ninety (90) days due to unusual circumstances, the City-County Planning Department may grant the facility owner an additional ninety (90) days in which to comply with the requirements of this section.

(j) *Special Review Submittal requirements.* The applicant of new broadcast facilities shall provide the following documentation for review by the City-County Planning Department:

(1) A map to scale showing the service area of the proposed broadcast facility.

(2) A site/landscaping plan showing the following items:

a. North arrow.

b. The location and dimensions of all vehicular points of ingress and egress, drives, alleys and streets.

c. Property boundaries and lot line dimensions.

d. The locations and dimensions of all existing and proposed buildings, structures, and improvements including those that will be removed. All information must be labeled.

e. Setbacks from all property boundaries for existing and proposed structures and buildings.

f. Centerline and names of major and minor arterial streets relevant to the application.

g. Elevation drawing of proposed broadcast facility including the antenna support structure, antenna platforms and associated equipment enclosures.

h. Latitude, longitude and height of proposed antenna support structures.

i. Location of artificial light sources and the areas of illumination.

j. Applications for tower farms shall include items a through h and a general overall development plan showing the location of future structures and equipment enclosures.

k. Detailed landscaping plan of the site when applicable.

l. Other pertinent features as determined by the Zoning Coordinator or Development Review Committee.

(3) Area map showing adjoining property boundaries and the location of existing buildings within a distance equal to the required setbacks as set forth in section (f)(3).

(4) Documentation of minimum light requirements from the FAA or other local state or federal agency for the antenna support structure and/or antennae. Where applicable, applicant will provide documentation of the FAA airspace review and a copy of the comments provided by the FAA. Where an application has been filed with the FAA for the services proposed and decision on minimum light requirements by the FAA is still pending, submittal of a copy of the proposed application shall be sufficient to meet the requirements of this paragraph.

(5) When the applicant is a land mobile radio service provider, or a radio or television broadcaster, proof must be provided that the applicant is licensed by the FCC to provide the services that the proposed facility is designed to support or the applicant must prove the necessary application have been filed with the FCC and/or FAA for the services proposed, together with proof all filing fees have been paid.

(k) *Special review uses*

(1) A request for a special review shall be initiated by application to the City-County Planning Department and handled in accordance with the special review procedure provided in section 27-1503 and 27-1509, BMCC of these zoning regulations. The Billings City Council or Yellowstone County commission may issue special review approval under these sections provided they have determined that the requirements of these regulations have been satisfied.

(2) In granting special review approval, the Billings City Council or Yellowstone County Commission may impose additional conditions to the extent determined necessary to buffer or otherwise minimize adverse effects of the proposed broadcast facilities on surrounding properties.

(3) Expiration of special review approval.

a. A building permit must be applied for within six (6) months of a special review approval and the project shall be completed within one (1) year from the date the special review is granted by the city council or county commission. For the purpose of these regulations, the term standard of

construction shall be defined as the installation of a permanent foundation for the antenna support structure. The city council and/or county commission may grant one (1) six (6) month extensions of the period to start construction upon written request by the applicant.

b. The city council or county commission shall not approve an extension unless the development plan is brought into conformance with any relevant zoning regulations that have been amended subsequent to the original approval and unless the applicant provides adequate evidence that construction is able to begin within the time period sought. This evidence shall include, but not be limited to, the acquisition of any or all required government approvals and project financing, the city council or county commission may as a condition of approval of a special review establish the period of time such special review may remain in effect.

c. Small increases in the height of existing antenna support structures approved by special review may be approved by the City-County Planning Department on an administrative basis provided that the increase in the height of the antenna support structure is ten (10) percent or less.

d. Special review approvals for broadcast antenna or tower farms shall not expire until such time as all facilities within the boundaries of the antenna or tower farm have been abandoned.

(l) *Appeals*. Appeals from any decision of the City-County Planning Department may be taken by any person aggrieved or any official of the city affected by the decision of the City-County Planning Department. Such appeal shall be to the city and/or county board of adjustment pursuant to section 27-1506 and/or section 27-1511 BMCC.

(m) *Nuisances*. Broadcast facilities, including, without limitation, power source, ventilation and cooling, shall be operated at all times within the city and/or county noise regulations, shall not be operated so as to cause the generation of heat that adversely affects a building occupant and shall not be maintained or operated in such a manner as to be a nuisance.

## Sec. 27-622. CONDOMINIUMS.

Condominiums are allowed in all zoning districts if they meet all applicable zoning district requirements and supplementary general provisions. Prior to filing a Declaration of Unit Ownership with the County Clerk and Recorder, the owner(s) shall submit to the Zoning Coordinator:

(1) A master site plan showing the dimensions of the lot(s) containing the condominium units and the location and dimensions of all buildings containing the units or an approved building permit.

(2) A master landscape plan or an approved building permit.

(3) A copy of the Declaration of Unit Ownership.

Only after determining that the condominium project complies with the applicable zoning district requirements and supplementary general provisions will the zoning coordinator issue a Certificate of Compliance.

The Certificate of Compliance will be filed with the County Clerk and Recorder prior to recording the Declaration of Unit Ownership. The Certificate shall state:

(1) The legal description of the property.

(2) The condominium units are exempt from 76-3-203, MCA because they comply with zoning based on the approved master site and landscaping plans.

(3) Any changes to the site or landscaping plans must be reviewed by the Planning Department.

# ARTICLE 27-700. SIGNS

## DIVISION 1. GENERALLY

### SEC. 27-701. SHORT TITLE.

This article of the city zoning ordinance shall be known as the "Sign Code" hereafter called code.

### SEC. 27-702. STATEMENT OF PURPOSE.

(a) This article creates the legal framework for signage regulations that is intended to facilitate an easy and agreeable communication between people. It recognizes the need to protect the safety and welfare of the public, the need for well-maintained, and attractive and aesthetically pleasing appearance in a community, and the need for adequate business identification and advertising and communication.

(b) This article authorizes the use of signs visible from public right-of-way provided the signs are:

(1) Compatible with their surroundings, pursuant to the objectives to proper design and zoning amenities;

(2) Allowing and promoting optimum conditions for meeting the sign user's needs while at the same time promoting the amenable environment and aesthetically pleasing appearance desired by the general public;

(3) Designed, constructed, installed and maintained in such a manner that they do not endanger public safety or traffic safety;

(4) Legible, readable and visible in the circumstances in which they are used;

(5) Respectful of the reasonable rights of other advertisers whose messages are displayed.

## SEC. 27-703. DEFINITIONS.

The following words and phrases, when used in this article, shall have the meanings respectively ascribed to them:

*Architectural blade sign:* A wall sign or projecting sign with no legs or braces, on a structure or building larger than three (3) stories and designed to look as a part of the building structure, rather than something suspended from or standing on the building.

*Awning, canopy or marquee:* A roof-like shelter detached or extending from part or all of a [structure].

*Balloon sign:* Means any sign that is a balloon, inflatable figure, or inflatable structure. For purposes of this article, balloon signs do not include passenger hot air balloons used for air travel.

*Building frontage:* The linear length of a building facing the public access or right-of-way.

*Canopy or marquee sign:* Any sign attached to, constructed in or on a canopy or marquee or across a series of canopies or marquees located on the same building face.

*Copy:* The wording or message on a sign surface either in permanent or removable letter or panel form.

*Free-standing signs:* Any sign supported by uprights or braces permanently placed upon the ground, and not attached to any building.

*Frontage:* The length of the property line of any one (1) premises along each public right-of-way it borders excluding alleys and serviceways.

*Ground level* means the lowest point of elevation of the finished surface of the ground, paving or sidewalk within the area between the sign and property line or, when the property line is more than five (5) feet from the sign, between the sign and a line five (5) feet from the sign.

*Height of sign:* The vertical distance measured from the finish ground level grade to the highest point of the sign. Exaggerated or artificial berming to increase height of sign shall not be permitted.

*Identification sign:* A sign which is limited to the name, address and number of a building, institution or person and to the activity/service carried on in the building or institution, or the occupancy of the person.

*Interstate corridor:* means the area of the city which is within six hundred sixty (660) feet of the nearest edge of the right-of-way of a designated interstate highway and which area is not in a residential zone or used for residential purposes.

*Maintain:* To permit a sign, structure or any part of each to continue or to repair or refurbish a sign, structure or any part of either.

*Medical campus:* means a definable area owned, developed, occupied, and used by the owner for medical and medical related services, even though the area consists of two (2) or more city blocks, provided however, the blocks are contiguous.

*Nameplates:*

(1) *Commercial nameplate:* A non-electric sign identifying only the name and occupation or profession of the occupant of premises on which the sign is located.

(2) *Residential nameplate:* A non-electric sign identifying only the name and address of the occupant.

*Neighborhood Watch sign:* Neighborhood Watch is a national program based upon the idea that community members can prevent or help deter crimes in their neighborhoods. The Neighborhood Watch program is administered by local law enforcement. A Neighborhood Watch sign is a sign obtained through the local law enforcement agency that is posted on property within a residential or public zoning district.

*Nonconforming sign (legal):* Any advertising structure or sign which was lawfully erected and maintained prior to such time as it came within the purview of this article and any amendments thereto, and which fails to conform to all applicable regulations and restrictions of this article, or a nonconforming sign for which a special permit has been authorized.

*Off-premise/billboard sign:* A sign which directs attention to a business, activity, products, commodity, service, entertainment or communication which is not conducted, sold, or offered at the premises on which this sign is located, or which does not pertain to the premises upon which the sign is located.

*On-premise sign:* means any sign identifying or advertising a business, activity, goods, products or services located on the premise where the sign is installed and maintained.

*Owner:* A person recorded as such on official records and including duly authorized agent.

*Parcel:* A single tract or parcel of land, no matter how legally described whether by metes and bounds, certificate of survey, and/or by lot or lots and block designation as in a recorded plat, which at the time of applying for a building permit is designated by its owner or developer as the tract to be used, developed or built upon as a unit of land under single ownership or control and assigned to the particular use for which the building permit is being secured and having frontage on or access to a public street over an easement approved by the city engineer.

*Penthouse:* A structure on top of a building roof such as houses, an elevator shaft, or similar form.

*Premises:* An area of land with its appurtenances and buildings which, because of its unity of use, may be regarded as the smallest conveyable unit of real estate.

*Primary public entrance:* means an entrance to a business which is open to the public during its normal and customary hours of operations and the entrance is used as the primary ingress and egress to the business by the public.

*Projecting signs:* means a sign other than wall sign which is suspended from or supported by a building or wall and which projects more than twelve (12) inches.

*Public right-of-way width:* The perpendicular distance across a public street measured from property line to property line. When property lines on opposite sides of the public street are not parallel, the public right-of-way width shall be determined by the city engineer.

*Roof sign:* Means a sign erected, constructed and maintained upon, or connected to any roof of any building with the principal support on the roof structure. This definition excludes architectural blade signs.

*Shopping center or mall:* A shopping center is a mix of retailing land and service uses offering both essential and nonessential goods and services, with at least five (5) stores or one hundred thousand (100,000) square feet, and that attracts consumers from a region-wide market area.

*Sign:* Any identification, description, illustration or device illuminated or non-illuminated which is visible from any public place or is located on private property and exposed to the public and which directs attention to a product, service, place, activity, person, institution, business or solicitation, including any permanently installed or situated merchandise; or any emblem, painting, banner, pennant, placard or temporary sign designed to advertise, identify or convey information, with the exception of window displays and national flags. For the purpose of removal, signs shall also include all sign structures.

*Sign administrator:* The city administrator or his or her designated representative.

*Sign area* means the entire area within any type of perimeter or border which may enclose the outer limits of any writing, representation, emblem, figure or character. The area of the sign having no such perimeter or border shall be computed by enclosing the entire area with parallelograms, triangles or circles of the smallest size sufficient to cover the entire area of the sign and computing the area of these parallelograms, triangles or circles. The area computed shall be the maximum portion or portions which may be viewed from any one direction.

*Street:* A public way for vehicular traffic, whether designated as a street, highway, thoroughfare, parkway, road, avenue, boulevard, land, place, or however otherwise designated which has been dedicated to or acquired for public use and extends the full width between right-of-way lines.

*Temporary/portable sign:* A sign advertising on an interim basis special business sales, new business openings, special events, goods, products, services, or facilities located on premise. A temporary sign is differentiated from a permanent sign in that a permanent sign is attached to a building or structure or affixed in the ground. A temporary/portable sign is mobile and free-standing. Any electrical temporary sign shall comply with all city electrical codes.

*Under canopy sign:* A sign suspended below the ceiling or roof of a canopy.

*Unlawful sign:* A sign which contravenes this article or which the administrator may declare as unlawful if it becomes dangerous to public safety by reason of dilapidation or abandonment or a nonconforming sign for which a permit required under a previous sign code was not obtained.

*Use:* The purpose for which a building, lot, sign or other structure is arranged, intended, designed, occupied or maintained.

*Wall sign* means any sign painted on, mounted on, attached to or erected against the wall of a building and approximately paralleled to the face of a principal building wall and projecting not more than twelve (12) inches from the plane of the wall. Street graphic on the outside of a window is considered a wall sign.

## SEC. 27-704. PERMITS, FEES, INSPECTION AND INDEMNIFICATION.

(a) *Permits required.* Except as otherwise provided in this article, it shall be unlawful for any person to erect, construct, enlarge, move or convert any sign in the city or cause the same to be done, without first obtaining a sign permit for each sign from the sign administrator as required by this article. These directives shall not be construed to require any permit for a change of copy on any sign, nor for the repainting, cleaning and other normal maintenance or repair of a sign or sign structure for which a permit has previously been issued, so long as the sign or sign structure is not modified in any way. No new permit is required for signs which have permits and which conform with the requirements of this article on November 24, 1980 unless and until the sign is altered or relocated.

Every sign permit issued by the sign administrator shall become null and void if installation is not commenced within one hundred twenty (120) days from the date of such permit. If work authorized by such permit is suspended or abandoned for one hundred twenty (120) days any time after the work is commenced, a new permit shall be first obtained to do so, and the fee will be one-half the amount required for a new permit for such work, provided that no changes have been made in the original plans. Such permit may not be unreasonably withheld, providing that proper application and payment of permit fees is complied with and a proper application is fully and correctly completed.

(b) *Sign contractor's license.* No person shall perform any work or service for any person or for any government entity for compensation, in or in connection with the erection, construction, enlargement, alteration, repair, moving, improvement, maintenance, conversion or manufacture of any sign in the city, or any work or service in connection with causing any such work to be done unless such person shall first have obtained a sign contractor's license and bond from the city and paid the license fees provided for by the city, or shall be represented by a duly licensed agent or subcontractor.

(c) *Permission to install.* No person shall erect, construct or maintain any sign upon any property or building without the consent of the owner or person entitled to possession of the property or building if any, or their authorized representatives.

(d) *Application for permit.* Application for a permit shall be made to the sign administrator upon a form provided by the sign administrator and shall be accompanied by such information as may be required to assure compliance with all appropriate laws and regulations of the city including:

(1) Name and address of owner of the sign;

(2) Name and address of owner or the person in possession of the premises where the sign is located or to be located;

(3) Clear and legible drawings or photo with description definitely showing location of the sign which is the subject of the permit and all other existing signs whose construction requires permits, when such signs are on the same premises;

(4) Drawings showing the dimensions, construction supports including footings, sizes, materials of the sign and method of attachment and character of structural members to which attachments are to be made. A certification of the total electrical energy consumption of all sign components (lights, motors, etc.) stated in watts. The

design, quality, materials and loading shall conform to the requirements of the currently adopted Uniform Building Code, as amended, and the National Electrical Code. If required by the sign administrator, engineering data shall be supplied on plans submitted certified by a licensed professional engineer;

(5) Statement certifying that applicant has reviewed the site development ordinance, section 6-1205, and believes that applicant is in compliance with this article.

(e) *Issuance; denial.* The sign administrator shall issue a permit for the erection, alteration or relocation of a sign within the city when an application therefor has been properly made and the sign complied with all appropriate laws and regulations of the city. The sign administrator may, in writing, suspend or revoke a permit under provisions of this section whenever the permit is issued on the basis of a misstatement of fact or fraud. When a sign permit is denied by the sign administrator, he or she shall give written notice of the denial to the applicant, together with a brief written statement of the reasons for the denial.

(f) *Effect of issuance.* No permit for a sign issued hereunder shall be deemed to constitute permission or authorization to maintain an unlawful sign nor shall any permit issued hereunder constitute a defense in an action to abate an unlawful sign.

(g) *Permit fees.* Application for permits shall be filed with the sign administrator, together with a permit fee as specified by the sign administrator, for each sign in accordance with the schedule established by the city administrator.

(h) *Sign permit appeals:*

(1) *Appeal from denial of permit.* Appeal may be taken to the board of adjustment from the sign administrator's denial of a sign permit.

(2) *Appeal from failure of sign administrator to grant permit within thirty (30) days.* The sign administrator's failure to either formally grant or deny a sign application within thirty (30) days of the date an application meeting the requirements of this article is filed shall be grounds for appeal to the board of adjustment under the terms of this chapter.

(i) *Notice of change of sign owner or user.* Whenever there is a change in the sign user, owner, or owner of the property on which the sign is located, the new sign user, owner or new property owner shall forthwith notify the sign administrator of the change. No new sign permit is required, unless the sign is altered or relocated (or existed as a nonconforming use prior to November 24, 1980).

(j) *Inspection.* The person erecting, altering or relocating a sign shall notify the sign administrator upon completion of the work for which permits are required.

(1) *Inspections.* All signs shall be subject to a final inspection by the sign administrator or shall require a certificate of compliance from a licensed sign installer.

(2) *Maintenance.* Every sign in the city, including but not limited to those signs for which permits or for which no permits or permit fees are required, shall be maintained in good structural condition at all times. All signs, including those exempted, shall be kept neatly painted, including all metal parts and supports by which these conditions are deteriorating. The sign administrator shall inspect and have the authority to order

the painting, repair, alteration or removal of signs which become dilapidated or are abandoned, or which constitute physical hazard to the public safety.

(3) *Signs declared unlawful.* The sign administrator may declare any sign unlawful if it endangers public safety by reasons of inadequate maintenance, dilapidation or abandonment. Any such declaration shall state the reasons of the sign administrator for stating that the sign constitutes a safety hazard to the general public.

Any sign owned, kept, displayed or maintained by any person with the city, the ownership keeping a display which is unlawful pursuant to the provisions of this article, is hereby declared to be in violation of this article. The sign administrator may declare any such sign to be unlawful, and such declaration shall state in writing the reason or reasons why such sign and the keeping, owning, maintenance, construction and display or operation thereof, is unlawful under the terms of this article.

(Ord. No. 4323, § 1(3), (3.10), 11-24-80; Ord. No. 89-4781, §§ 3--5, 2-27-89)

## SEC. 27-705. SIGNS PERMITTED IN ZONING DISTRICTS OF CITY.

(a) *Residential zones.* Within any residential zone, signs or residential nameplates are permitted as follows:

(1) For each single-family home or duplex house, one (1) residential nameplate not exceeding a combined sign area of two (2) square feet for each occupancy. The nameplate shall not be subject to the permit requirements of this article. Commercial nameplates shall not be permitted in residential zones;

(2) For multiple-family uses, rooming and boarding houses, one (1) identification sign for each developed parcel, not exceeding twelve (12) square feet in sign area;

(3) Identification signs, bulletin boards, and other similar structures for governmental agencies which may be regulated by the city are subject to approval thereof by the sign administrator;

(4) All signs, except for neighborhood identification signs provided in subsection (6) below, shall be placed flat against a building or designed as part of an architectural feature thereof;

(5) No sign shall block any means of egress or any window;

(6) For a neighborhood or tract, two (2) identification signs per tract entrance. A sign, masonry wall, landscaping and other similar materials or features may be combined to form a display for neighborhood or tract identification, provided that the legend of such sign or display shall consist only of the neighborhood, tract, or developer's name and logo. No sign or structure shall exceed thirty-two (32) square feet in size nor be over eight (8) feet in height as established from the street grade and must be located a minimum of five (5) feet behind all property lines.

(7) For each lot within a residential zone, one (1) Neighborhood Watch sign may be posted for each street frontage. The total area of all Neighborhood Watch signs on a single property will not exceed sixteen (16) square feet in sign area.

(b) *Residential professional and public zones.* Within these zones, signs are permitted as follows:

(1) One (1) identification sign or commercial nameplate for each developed parcel not to exceed a total of thirty-two (32) square feet in sign area for all displays;

(2) Signs shall be placed flat against a building or designed as part of an architectural feature thereof. Signs may also be detached if they do not exceed a height of eight (8) feet. Detached signs must be located a minimum of five (5) feet behind all property lines;

(3) No height limit is specified for signs placed flat against the wall of a building or for other attached signs provided all other provisions of this article are complied with;

(4) Each occupancy within the developed parcel may have an individual nameplate not exceeding four (4) square feet;

(5) When a developed parcel fronts on more than one (1) public right-of-way or street, excluding alleys and serviceways, the above provisions of subsection (b) shall apply to each frontage.

(6) For each lot within a residential professional or public zone, one (1) Neighborhood Watch sign may be posted for each street frontage. The total area of all Neighborhood Watch signs on a single property will not exceed sixteen (16) square feet in sign area.

(c) *Community commercial, neighborhood commercial, neighborhood commercial limited, controlled industrial, heavy industrial, highway commercial, and Central Business District.* Within these zones, signs are permitted as follows:

(1) One (1) free-standing sign indicating only the name and nature of the occupancy for each developed parcel not to exceed three (3) square feet of sign area for each lineal foot of street frontage abutting the developed portion of the parcel, provided that:

a. Where a developed parcel has in excess of three hundred (300) feet of street frontage, one (1) additional free-standing sign may be erected for each additional three hundred (300) feet of street frontage in excess of the first three hundred (300) feet of street frontage abutting the developed portion of the parcel; Signs will be permitted as follows:

| *Frontage Feet* | *Signs* |
|---|---|
| 0-- 600 | 1 free-standing sign |
| 601-- 900 | 2 free-standing signs |
| 901--1200 | 3 free-standing signs |
| Over 1200 | 3 free-standing signs plus, 1 additional sign for each 300 lineal street frontage feet over 1200 frontage feet |

b. Where a developed parcel is permitted to have more than one (1) free-standing sign under this article, the distance between the free-standing signs on each parcel shall be not less than one hundred fifty (150) frontage feet;

c. The sign must be located five (5) feet behind all property lines except:

(i) If the bottom of the structure is twelve (12) feet or higher above the establish grade, then the sign structure may be located up to one (1) foot behind the property line; or

(ii) If the sign is in the Central Business District, then the sign structure can be located up to the property line.

d. No free-standing sign shall exceed the height of thirty (30) feet except free-standing signs in the highway commercial zone and within the interstate corridor which shall not exceed the height of fifty (50) feet. No sign shall exceed one hundred seventy-five (175) square feet in sign area except for a

parcel's first free-standing sign located within the interstate corridor which shall not exceed four hundred forty (440) square feet in sign area. Any additional free-standing sign authorized on a parcel shall not exceed one hundred seventy-five (175) square feet in sign area. One (1) measured side of the display shall compose the square footage;

e. If a free-standing sign projects over a private vehicular driveway or parking lot aisle, the minimum clearance between the bottom of the sign and the ground shall be seventeen (17) feet;

f. No rotating free-standing sign shall rotate at a rate faster than six (6) revolutions per minute or have a minimum clearance lower than nine (9) feet between the bottom of the sign and the ground;

g. When a developed parcel fronts on more than one (1) public right-of-way or street, excluding alleys and serviceways, the above provisions of subsection (c) shall apply to each frontage.

(2) One (1) wall or one (1) canopy sign and four (4) architectural blade signs indicating only the name and nature of the occupancy for each occupancy within the developed parcel as follows:

a. No sign shall exceed a total area of three (3) square feet of copy for each lineal foot of building frontage of each occupancy except buildings over two (2) stories shall be allowed an additional one (1) square foot of copy for each lineal foot of building frontage of each occupancy. The allowable sign area shall be reduced by the sign area for each wall sign installed over any primary public entrances pursuant to subsection (3) below;

b. If such occupancy is on a corner, one (1) wall sign or one (1) canopy sign will be permitted for each frontage face;

c. A permitted wall sign(s) can be transferred from one wall to another wall provided the number of signs remain within the permitted number of signs and within allowable sign area;

d. No wall or canopy signs shall project into the public right-of-way, except

i. In the Central Business District, wall signs may project eighteen (18) inches over the right-of-way, subject to a minimum height limit of nine (9) feet from the sidewalk; and

ii. In the Central Business District, canopy signs may project up to two (2) feet to a vertical line from the curb face over the right-of-way.

e. If the building includes a canopy, each tenant will be permitted one (1) under canopy sign per public entrance in lieu of the wall or canopy sign. Any signs attached to the underside of a canopy shall be perpendicular to the wall face of the building and shall not have a copy area greater than four (4) square feet or have a clearance lower than of eight (8) feet from the sidewalk.

(3) One (1) roof sign, in lieu of the wall or canopy sign authorized in section 27-705(c)(2) above, indicating only the name and nature of the occupancy for each developed parcel as follows:

a. The sign shall not extend above the highest plane of the roof;

b. The supports, anchors, or braces for the roof sign shall be enclosed so that they are not visible from the street or other public or private property; and

c. The sign is designed similar to a wall sign or projecting sign, and designed to look like part of the building or roof structure, rather than something suspended from or standing on the building.

(4) One (1) wall sign for each "primary public entrance" of the business indicating only name of the occupancy within the developed parcel provided:

a. The combined sign area of all signs over all primary public entrances does not exceed the sign area of one allowable wall sign; and

b. No wall or canopy signs shall project into the public right-of-way, except in the Central Business District wall signs may project eighteen (18) inches over the right-of-way, subject to a minimum height limit of nine (9) feet from the sidewalk.

(d) *Historic District zone.*

(1) *Statement of special purpose.* This special code acknowledges the unique visual concerns associated with the Billings Townsite Historic District as defined in section 6-1103, and recognizes the benefits of restoring the district's visual appearance of prosperity, cohesiveness, and historic integrity, while continuing to promote business advertising variety, individuality, and growth.

(2) *Signs permitted in historic district.* Within the Billings Townsite Historic District, signs are permitted as follows:

a. Signs and sign lettering within the Billings Townsite Historic District shall be designed and installed to compliment the architectural style.

b. No sign will be permitted to obscure or cover any significant architectural detail or decorative element of the existing building.

c. Only signs that advertise an activity, business, product or service conducted or available on the premises on which the sign is located, shall be allowed within the Billings Townsite Historic District.

d. No new roof signs shall be permitted.

e. Excluding window signs, one additional sign type per business is allowed, except for business with entrances on more than one street, in which case one sign type per street entrance is allowed.

f. No off-premise signs are permitted.

g. The size of signs in the historic district is limited to fifty (50) percent of that allowed in this article.

h. Once the copy of an existing sign is changed it must come into compliance with the special provisions of the historic sign district and the existing sign code.

[1] (Ord. No. 4323, § 1(4), 11-24-80; Ord. No. 83-4537, § 1(8.4.1, 8.4.2, 8.4.8), 8-8-83; Ord. No. 88-4754, § 1, 2-1-88; Ord. No. 89-4781, § 6, 2-27-89; Ord. No. 90-4831, § 3, 6-4-90; Ord. No. 91-4865, § 2, 3-11-91; Ord. No. 99-5082, § 1, 2-8-99; Ord. No. 05-5353 , Ord. No. 06-5365 )

## SEC. 27-706. SPECIAL CIRCUMSTANCE SIGNS.

(a) *Service station or convenience (gasoline) store signs.* Regardless of which zoning district a service station or convenience (gasoline) store is located within, such uses shall be permitted the following signs:

(1) One (1) free-standing sign indicating only the name and nature of the occupancy for each developed parcel not to exceed three (3) square feet of sign area for each lineal foot of street frontage abutting the developed portion of the parcel, provided that:

a. Signs will be permitted as follows:

| *Frontage Feet* | *Signs* |
|---|---|
| 0--600 | 1 free-standing sign |
| 601--900 | 2 free-standing signs |
| 901--1200 | 3 free-standing signs |
| Over 1200 | 3 free-standing signs plus, 1 additional sign for each 300 lineal street frontage feet over 1200 frontage feet |

b. Where a developed parcel is permitted to have more than one (1) free-standing sign under this article, the distance between the free-standing signs on each parcel shall be not less than one hundred fifty (150) frontage feet;

c. The sign must be located five (5) feet behind all property lines except:

(i) If the bottom of the structure is twelve (12) feet or higher above the establish grade, then the sign structure may be located up to one (1) foot behind the property line; or

(ii) If the sign is in the Central Business District, then the sign structure can be located up to the property line.

d. No free-standing sign shall exceed the height of thirty (30) feet except free standing signs in the highway commercial zone which shall not exceed the height of fifty (50) feet. No signs shall exceed one hundred seventy-five (175) square feet in sign area. One (1) measured side of the display shall compose the square footage;

e. No rotating free-standing sign shall rotate at a rate faster than six (6) revolutions per minute or have a minimum clearance lower than nine (9) feet between the bottom of the sign and the ground;

f. When a developed parcel fronts on more than one (1) public right-of-way or street, excluding alleys and serviceways, the above provisions of subsection a. shall apply to each frontage.

(2) One (1) wall or one (1) canopy sign and four (4) architectural blade signs indicating only the name and nature of the occupancy for each occupancy within the developed parcel as follows:

a. No sign shall exceed a total area of three (3) square feet of copy for each lineal foot of building frontage of each occupancy except buildings over two (2) stories shall be allowed an additional one (1) square foot of copy for each lineal foot of building frontage of each occupancy;

b. If such occupancy is on a corner, one (1) wall sign or one (1) canopy sign will be permitted for each frontage face;

c. A permitted wall sign(s) can be transferred from one wall to another wall provided the number of signs remain within the permitted number of signs and within allowable sign area;

d. No wall or canopy signs shall project into the public right-of-way, except:

(i) In the Central Business District, wall signs may project eighteen (18) inches over the right-of-way, subject to a minimum height limit of nine (9) feet from the sidewalk; and

(ii) In the Central Business District, canopy signs may project up to two (2) feet to a vertical line from the curb face over the right-of-way.

e. If the building includes a canopy, each tenant will be permitted one (1) under canopy sign. Any signs attached to the underside of a canopy shall be perpendicular to the wall face of building and shall not have a copy area greater than four (4) square feet or have a clearance lower than of eight (8) feet from the sidewalk.

(3) A maximum of four (4) wall signs may be located on or incorporated within the pump island canopy structure, whether attached or detached from the main structure/building. Such signs shall not project above the top of the canopy structure, shall not exceed a maximum area of twenty (20) square feet for each sign face, and each sign shall be limited in length to a maximum of fifty (50) percent of the long dimension of the canopy on which the sign is located. This section shall not prohibit the placement of trademark symbols on individual gasoline pumps.

(4) One (1) poster/price sign structure shall be permitted and shall not exceed four (4) feet in width and six (6) feet in height from the ground level. Such poster type signs shall be located at an approved site. Such signs may be used for price or special message advertising.

(5) Temporary signs shall be permitted pursuant to section 27-706(e).

(b) *Off-premise/billboard signs.*

(1) Purpose and intent: The purpose of this section is to regulate the impact of billboards on the community; to improve the appearance of I-90, Main Street, Highway 3, 27th Street and entryways; to enhance the urban design of the greater downtown area and the west end; to insure compatibility between billboards and adjacent land uses; and to limit the impact that billboards have on sign clutter in

the community. The city recognizes that billboards are a necessary and appropriate advertising medium, and that there are acceptable and viable locations for billboards within the community.

It is the intent of this subsection to address the following specific concerns regarding the impact of billboards upon the community:

a. The citizens of Billings, and others visiting or traveling through the city are very concerned about the urban design and visual integrity of the city.

b. Billboards may be often incongruous with the city's natural setting and features due to their large-scale figures, numbers, letters, and colors.

c. A billboard may dominate the view from vehicles and interfere with the occupants' enjoyment of the city's natural setting and features.

d. A high concentration of billboards may create traffic safety problems and distract attention away from public safety signs.

e. Billboards of excessive size or height should be downsized within a reasonable period of time.

f. Billboards are incompatible with residential uses.

g. The I-90, Highway 3, Main Street, 27th Street, other entryways, and Shiloh Road are major entryways to the city which are of particular importance in terms of urban design and public perception to citizens, visitors, and tourists.

h. The downtown area defined in the Downtown Framework Plan is an area in which urban design significantly influences the health and vitality of the total community.

(2) No off-premise/billboard sign shall be constructed or erected in any district after the date of the enactment of this subsection 27-706(b) [Ord. No. 99-5107, enacted Nov. 22, 1999]. For each non-conforming off-premise/billboard sign face removed a conforming off-premise/billboard sign face may be erected. Therefore, if a proposed conforming off-premise/billboard sign face will replace an existing non-conforming off-premise/billboard sign face within the city limits, then such proposed off-premise/billboard sign face shall comply with all of the applicable regulations contained herein.

When all non-conforming off-premise/billboard signs within the city have been removed pursuant to this section, then additional off-premise/billboard signs may be constructed in accordance with the regulations contained herein.

(3) Location standards: All billboards shall be located in accordance with the following standards:

a. Zoning districts:

1. Billboards shall be permitted as an allowed use in Highway Commercial (HC), Controlled Industrial (CI), and Heavy Industrial (HI) zoning districts.

2. Billboards shall be permitted as an allowed use in Community Commercial (CC) zoning district provided that the structure is two hundred (200) feet or more from a residential zoning district.

3. A special review shall be required for all billboards to be located in a CC zone if the structure is less than two hundred (200) feet but greater than one hundred-fifty (150) feet from a residential zoning district.

4. Billboards shall be permitted in Central Business District (CBD) upon approval of a special review.

5. No new billboards shall be permitted on, directed to, or within two hundred (200) feet of the following corridors:

   i. 27th Street from I-90 to Airport Road (excluding 27th Street North from Montana Avenue to 6th Avenue North).

   ii. Highway 3 (Airport Road) from Alkali Creek Road west to the city limits.

   iii. Shiloh Road from I-90 to Rimrock Road.

   iv. Yellowstone River.

   v. Any historic district registered on the National Register of Historic Places.

b. Locations standards:

1. Billboards shall be set back 20 feet from the front property line.

2. No billboard shall be placed on the roof of any building or structure.

c. Spacing standards:

1. Billboards shall be required to have the following spacing requirements:

   i. Billboards located in CC shall have a minimum spacing of a 1,000-foot radius from any other off-premise structure.

   ii. Billboards located in HC shall have a minimum spacing of a 600-foot radius from any other off-premise structure.

   iii. Billboards located in CI and HI shall have a minimum spacing of six hundred (600) linear feet from any other off-premise structure.

2. No billboard shall be placed within one hundred fifty (150) feet of any residential zone.

(4) Area, height, face, and pole standards: All billboards shall conform to the following standards:

a. Sign area: New billboards faces and supporting framework shall not exceed the following sign areas:

1. New billboards shall be a maximum of two hundred fifty (250) square feet.

2. New billboards located within the Interstate Corridor shall not exceed four hundred eighty (480) square feet.

b. Height:

1. The maximum overall height shall be thirty-five (35) feet above the road grade to which the billboard reads.

2. The minimum distance between grade and the bottom of the billboard shall be fifteen (15) feet.

c. Faces:

1. There shall be no more than a total of two (2) faces per supporting structure.

2. All structures must be single face, back-to-back, or "v" type of construction.

d. Pole construction: All structures must be of single pole construction.

(5) Lighting: Lighting will not cause hazardous or unsafe driving conditions for motorists and will not glare, reflect, or spill onto adjacent business or residential areas.

(6) Maintenance and discontinuance:

a. Maintenance:

1. All sign supports, braces, guys and anchors, shall be kept in good repair. Faces of all signs shall be kept neatly painted or posted at all times. The city shall notify the sign owner or its agent, in writing, of any sign that is not in proper state of repair. If corrective action is not taken within (30) days of written notice, the city official may order the removal of the sign.

2. Off-premise/billboards signs that are damaged or destroyed by more than fifty (50) percent of the value of the sign structure shall not be reconstructed and shall be removed.

3. All areas around the sign structure shall be kept litter and weed free.

b. Discontinuance: The city may order the removal of any billboard, without compensation, upon which the advertising or other message has been discontinued for more than sixty (60) days continuous days. The owner shall either advertise upon or remove said billboard within thirty (30) days of written notification by the city.

(7) Special review requirements for off-premise/billboard signs in CC and CBD. The following criteria will be used in reviewing the proposed structure:

a. That the location and placement of the sign will not endanger motorists or pedestrians and does not interfere with the clear vision triangle at street, railroad, or street driveway intersections.

b. That the signs in the CBD will not cover or blanket any prominent view of a structure or facade of historical or architectural significance.

c. That the sign will not obstruct views of users of adjacent buildings to side yards. This requirement does not include views of distant vistas.

d. That the sign cannot be seen from churches, schools, the Yellowstone River or any city, county, or state park or if it can be seen it must be located at two hundred fifty (250) feet from the boundaries of such places.

e. That the height of signs located in undeveloped areas (no buildings within 300-foot radius) shall not exceed twenty-six (26) feet above grade. The minimum clearance of a sign shall never be less than fifteen (15) feet.

f. That the sign's lighting will not cause hazardous or unsafe driving conditions for motorists and will not glare, reflect, or spill onto adjacent business or residential areas.

(c) *Shopping center or mall signs.*

(1) One (1) free-standing sign indicating only the name and nature of the occupancy for each developed parcel not to exceed three (3) square feet of sign area for each lineal foot of street frontage abutting the developed portion of the parcel, provided that:

a. Signs will be permitted as follows:

| *Frontage Feet* | *Signs* |
|---|---|
| 0-- 600 | 1 free-standing sign |
| 601-- 900 | 2 free-standing signs |
| 901--1200 | 3 free-standing signs |
| Over 1200 | 3 free-standing signs plus, 1 additional sign for each 300 lineal street frontage feet over 1200 frontage feet |

b. Where a developed parcel is permitted to have more than one (1) free-standing sign under this article, the distance between the free-standing signs on each parcel shall be not less than one hundred fifty (150) frontage feet;

c. The sign must be located five (5) feet behind all property lines except:

i. If the bottom of the structure is twelve (12) feet or higher above the establish grade, then the sign structure may be located up to one (1) foot behind the property line; or

ii. If the sign is in the Central Business District, then the sign structure can be located up to the property line.

d. No free-standing sign shall exceed the height of thirty (30) feet except freestanding signs in the highway commercial zone which shall not exceed the height of fifty (50) feet. No signs shall exceed four hundred (400) square feet in sign area. One (1) measured side of the display shall compose the square footage;

e. If a free-standing sign projects over a private vehicular driveway or parking lot aisle, the minimum clearance between the bottom of the sign and the ground shall be seventeen (17) feet;

f. No rotating free-standing sign shall rotate at a rate faster than six (6) revolutions per minute or have a minimum clearance lower than nine (9) feet between the bottom of the sign and the ground;

g. When a developed parcel fronts on more than one (1) public right-of-way or street, excluding alleys and serviceways, the above provisions of subsection (c) shall apply to each frontage.

(2) One (1) wall or one (1) canopy sign and four (4) architectural blade signs indicating only the name and nature of the occupancy for each occupancy within the developed parcel as follows:

a. No sign shall exceed a total area of three (3) square feet of copy for each lineal foot of building frontage of each occupancy except buildings over two (2) stories shall be allowed an additional one (1) square foot of copy for each lineal foot of building frontage of each occupancy;

b. If such occupancy is on a corner, one (1) wall sign or one (1) canopy sign will be permitted for each frontage face;

c. A permitted wall sign(s) can be transferred from one wall to another wall provided the number of signs remain within the permitted number of signs and within allowable sign area;

d. No wall or canopy signs shall project into the public right-of-way, except:

i. In the Central Business District, wall signs may project eighteen (18) inches over the right-of-way, subject to a minimum height limit of nine (9) feet from the sidewalk; and

ii. In the Central Business District, canopy signs may project up to two (2) feet to a vertical line from the curb face over the right-of-way.

e. If the building includes a canopy, each tenant will be permitted one (1) under canopy sign. Any signs attached to the underside of a canopy shall be perpendicular to the wall face of building and shall not have a copy area greater than four (4) square feet or have a clearance lower than eight (8) feet from the sidewalk.

(3) Interior mall signs shall be regulated by the mall association or owner.

(d) *Medical corridor and South 27th Street corridor signs.*

(1) Statement of special purpose.

a. Medical Corridor. The Billings Medical Corridor Permit Zoning District as set forth in Article 27-900 (the "Medical Corridor") is a unique, distinct and separately identifiable area of the City of Billings. Over time, a majority of the Medical Corridor has developed a campus environment that is separate and distinct from the surrounding area. The large scale buildings, the

complexities of the medical campuses, the needs and abilities of those seeking medical and emergency services, and the diversification of services offered within the Medical Corridor create a need for flexibility in establishing clear way-finding and informational signage. Accordingly, this special Medical Corridor sign code is adopted to facilitate, enhance, encourage and promote the following purposes:

(i) To facilitate and foster complementary uses servicing the healthcare community, including hospitals, clinics, medical office buildings, laboratories, and related or supporting uses;

(ii) To promote a unique, attractive and distinctive healthcare campus environment with limited retail uses;

(iii) To encourage creativity and continuity in design, quality, and the character of new signage;

(iv) To anticipate and recognize the needs of patients and visitors in the Medical Corridor;

(v) To safeguard and enhance property values, and to protect public and private investment in the Medical Corridor;

(vi) To promote those qualities in the visual environment which bring economic value to the community;

(vii) To encourage the design of signs that are in harmony with the principal activities and structures that they serve and that are compatible with the overall healthcare campus environment;

(viii) To alleviate the burdens of complex compliance and enforcement responsibilities; and

(ix) To promote the public safety, welfare, convenience and enjoyment of travel and the free flow of traffic within the Medical Corridor.

The Medical Corridor is primarily occupied by regional healthcare providers that draw patients and visitors from a multi-state region. The Medical Corridor sign code recognizes that patients and visitors to the Medical Corridor need to be able to easily and conveniently locate, identify, and find their way to hospitals, medical groups, clinics, medial departments, laboratories, physicians, and other healthcare points of interest.

The primary purpose of the Medical Corridor is healthcare, with very limited retail uses. Accordingly, the Medical Corridor sign code recognizes that the primary purpose of signs in the Medical Corridor is not for retail purposes, yet retains historical restrictions for retail establishments within the Medical Corridor.

The caliber of the development of the medical campuses within the Medical Corridor over time has demonstrated a commitment to maintaining architecturally sound and aesthetically pleasing signage, as well as uniform appearance of signage within parcels under common ownership. Healthcare and healthcare providers are constantly evolving and changing. One of the express purposes of the Medical Corridor sign code is to provide healthcare providers with flexibility with respect to both way-finding and informational signage.

b. South 27th Street Corridor. This section acknowledges the architectural visual concerns associated with the South 27th Street Corridor Zoning District as set forth in Article 27-800. This section further recognizes the needs and benefits of limited sign standards that will adequately serve the uses in this zoning district and those who utilize their services, and at the same time, recognizes the need to protect the remaining residential areas within, adjacent and surrounding these zoning districts from the intrusion of unsightly, excessive and confusing sign usage.

(2) Healthcare Purposes Sign Definition. As used within this section, the term *Healthcare Purposes Sign* shall mean any sign located in the Medical Corridor (excluding prohibited signs) that:

a. identifies a hospital, clinic, medical building, healthcare facility, emergency room, trauma center, healthcare provider or Ancillary Healthcare Service (as defined herein below), and/or associated parking areas located in the Medical Corridor; or

b. provides direction to a hospital, clinic, medical building, healthcare facility, emergency room, trauma center, healthcare provider or Ancillary Healthcare Service, and/or associated parking areas located in the Medical Corridor.

For the purposes of this definition, the phrase "Ancillary Healthcare Service" shall not include restaurants, hotels, motels, churches, and gas stations.

(3) Except as provided in subsection (4) below, the Medical Corridor and the South 27th Street Corridor, signs are permitted per developed parcel as follows:

a. Two (2) monument type signs, provided the two (2) monument signs are located on separate public street frontages and located at least one hundred (100) lineal frontage feet apart, measured along property line, as follows:

i. One (1) main identification free-standing sign not exceeding forty (40) square feet in sign area nor be over twelve (12) feet in height;

ii. One (1) secondary identification free-standing sign not exceeding thirty-two (32) square feet in sign area nor be over eight (8) feet in height.

b. One (1) identification wall sign placed flat against a building or designed as part of an architectural feature for each public street frontage for each developed parcel not to exceed fifty (50) square feet in sign area.

c. Free-standing directory signs shall not exceed eight (8) square feet in sign area nor be over five (5) feet in height. Wall directory signs shall not exceed eight (8) square feet in sign area.

(4) Healthcare Purposes Signs Permitted

a. Except for those signs specifically prohibited by Section 5 below, all Healthcare Purposes Signs shall be permitted in all portions of the Medical Corridor except for the area west of North 30th Street.

b. Emergency Room and Trauma Center Signs. All Emergency Room and Trauma Center signs shall be permitted in the Medical Corridor as Healthcare Purposes Signs.

(5) Prohibited Signs and Lighting. The following signs and lighting shall be prohibited in the Medical Corridor:

a. Strobe lights;

b. Searchlights;

c. Balloon signs;

d. Portable signs;

e. Flashing neon signs;

f. Third party signs;

g. Billboards;

h. Flashing incandescent lamps;

i. Vehicles used as signs (provided that this provision shall not be construed as prohibiting the identification of a healthcare services entity or provider);

j. Signs projecting into Rights-of-Way;

k. Window signs;

l. Signs exceeding 20 (twenty) feet in height;

m. Signs exceeding 175 square feet of area;

n. Signs which by coloring, shape, wording or location resemble or conflict with traffic control signs or devices;

o. Signs that create a safety hazard for pedestrian or vehicular traffic;

p. Signs attached to or placed on a motor vehicle or trailer parked on public or private property, provided that this provision shall not be construed as prohibiting the identification of a firm or its product on a vehicle operating during the normal course of business;

q. Any electronic reader board sign or animated sign that is otherwise prohibited by the City of Billings Sign Code.

r. Wall signs which, individually or collectively, cover more than 25% of the surface area of any wall. The surface area of a wall shall be determined by

measuring the building height and multiplying it by the length of the wall, without deduction for doors and windows.

(e) *Church, school and other institutional use signs.* Regardless of which zoning district a church, school or other institutional use, including fraternal organizations, are located within, such uses shall be permitted the following signs:

(1) One (1) free-standing monument announcement sign or bulletin board not to exceed five (5) feet in height, or eight (8) feet in length, inclusive of supporting structure; and

(2) Two (2) wall signs placed flat against a building or designed as a part of an architectural feature not to exceed thirty-two (32) square feet per sign. Additional signs may be authorized by special review of the city council.

(f) *Temporary signs.*

(1) *Permits required.* It shall be unlawful for any owner or person entitled to possession of any property or business, or their authorized representatives, to erect, construct, move, or display a temporary sign or cause the same to be done, without first obtaining a temporary sign permit from the sign administrator. A temporary sign permit may be issued:

a. To new businesses or to existing businesses which are relocating and shall be limited in use to one time for no longer than sixty (60) days; or

b. To existing businesses for the purpose of advertising and shall be limited to a maximum of thirty (30) consecutive days per calendar year. Such thirty-day period may be split into no more than two (2) separate periods of fifteen (15) consecutive days each.

All temporary signs, other than over-street banners, shall be located on private property. Any temporary signs located on public rights-of-way shall be subject to removal by the sign administrator without notice.

(2) *Application for permits.* Application for a temporary sign permit shall be made to the sign administrator by the owner or person entitled to possession of the property or business on which the temporary sign is to be located and shall be upon the form prescribed by the city administrator. All information required by the sign administrator to assure compliance with all laws and regulations of the city shall accompany the application, including:

a. Name and address of the owner of the temporary sign;

b. Name and address of the owner or person in possession of the business or premises on which the temporary sign is to be located and the length of time that the business has existed at such location;

c. Clear and legible drawings or photo with description definitely showing the proposed location of the temporary sign which is the subject of the permit and of all other existing signs on the premises.

(3) *Permit fees.* The application for the temporary sign permit shall be filed with the sign administrator, together with a permit fee in the amount set forth in the fee schedule established by the city administrator.

(4) *Issuance--Denial.* The sign administrator shall issue a temporary sign permit for the erection or display of a temporary sign within the city when he has determined that the applicant has met all requirements of this section and all other applicable laws of the city. The sign administrator shall establish area/height allowance and shall specify where the temporary sign is to be located, taking into consideration clear vision and setback requirements. The sign administrator shall give the applicant a validation sticker indicating the expiration date of the permit. The applicant must immediately affix the sticker to the side of the temporary sign in a clearly visible location. No temporary sign may be displayed unless the validation sticker is in place and the sign is located in the position specified by the sign administrator. In no event shall a permit or sticker be valid for more than sixty (60) consecutive days.

(5) *Temporary sign logs.* All persons, firms, partnerships, corporations or businesses leasing or renting temporary signs shall maintain a temporary sign log and shall record therein in clear and legible ink: The location where and date that each of their temporary signs is installed; the names of the person and business to whom a temporary sign permit was issued for each sign; and the date that each temporary sign is removed. The original copy of each month's log shall be personally delivered to the sign administrator on the last working day of each month or shall be sent to the sign administrator through the United States mail, postmarked no later than the first day of the following month. Said log shall be open to the inspection of the sign administrator at all reasonable times.

(6) *Permits not required.*

a. The following temporary signs are allowed without permits:

1. Signs which identify the location of rummage and garage sales;

2. Signs which advertise the activities of a nonprofit organization;

3. Political posters (see section 27-707(b)(16));

4. Signs which advertise property for sale, lease or rent (see section 27-707(b)(19));

b. Such temporary signs allowed shall:

1. Be removed after thirty (30) days of use (see exceptions for political or campaign signs 27-707(b)(16));

2. Not exceed one (1) sign per property frontage.

c. No temporary sign shall cause unsafe ingress or egress or otherwise create traffic visibility problems.

(7) *Size and placement limitations.* Temporary signs shall only be allowed to a maximum height of eight (8) feet with allowable square footage not exceeding thirty-two (32) square feet on each side of the display. Measuring one (1) side of the display shall determine the square footage for purposes of computation. In addition, temporary signs shall be located at least one hundred fifty (150) feet apart and a minimum of five (5) feet behind all property lines.

(8) *Penalty.* Any person convicted of a violation of this section shall be guilty of a misdemeanor and shall be punished by a fine of not less than one hundred fifty dollars ($150.00).

(Ord. No. 4323, § 1(5), 11-24-80; Ord. No. 83-4537, § 1(8.5.9, 8.5.11), 8-8-83; Ord. No. 86-4701, § 1, 7-7-86; Ord. No. 89-4781, § 7, 2-27-89; Ord. No. 90-4831, § 4, 6-4-90; Ord. No. 98-5057, § 1, 5-11-98; Ord. No. 99-5082, § 2, 2-8-99; Ord. No. 99-5107, § 2, 11-22-99)

## SEC. 27-707. EXCEPTIONS AND EXEMPTIONS.

The following operations shall not be considered as creating a sign insofar as requiring the issuance of sign permit or permissibility in a district, but the signs must be in conformance with this article, ordinances and regulations of the city, and all other building, structural and electrical laws:

(a) *Permit exceptions:*

(1) Changing of the advertising copy or message on an existing approved painted or printed sign, marquee, changeable copy sign or a similar approved sign whether electrical, illuminated, electronic changing message center or non-illuminated painted message which are all specifically designed for the use of replaceable copy;

(2) Painting, repainting, cleaning or other normal maintenance and repair of a sign not involving structural changes. Replacement of or a change of a plastic face will be included as an exempt operation;

(3) Changes in the content of show window displays and permitted temporary signs;

(4) Changing sign--Automatic with no identification of ownership.

(b) *Exempt signs:*

(1) *Banner and balloon signs.* Banner and balloon signs are allowed as follows:

a. *Banner signs (public right-of-way):* Banner signs may be suspended across public right-of-way subject to the following conditions:

1. A banner sign application, which has been signed and approved by the owners of all private property to which the sign will be affixed, shall be submitted.

2. The banner sign application must be submitted to and approved by the city sign administrator prior to placement of the banner sign.

3. Message and symbols are limited to public service messages with no commercial advertising of any nature appearing on the banner. This shall not preclude the identification of an event sponsor provided that such identification shall not occupy more than fifteen (15) percent of the area of the banner.

4. The maximum allowable size of a banner sign is three (3) feet by twenty (20) feet.

5. The maximum time during which any banner sign may be displayed is thirty (30) days.

6. The city may require the applicant to indemnify the city and to provide insurance covering any liability that may occur as a result of placement of the sign.

7. Application for a banner sign may not be submitted earlier than six (6) months prior to the date when the sign will first be displayed.

b. *Banner signs (private property):* Banner signs may be securely attached to a structure, the wall of a building or canopy as follows:

1. Two (2) banner signs for two (2) periods in a calendar year not exceeding thirty (30) consecutive days per period at any business location;

2. Banner signs shall not exceed thirty-two (32) square feet in sign area; and

3. Banner signs shall not direct attention to a business commodity, service or entertainment not related to the premise at which the sign is located.

c. Balloon signs are allowed in all zones except residential and residential professional as follows:

1. One (1) balloon sign for a total period not to exceed three (3) days in any one-month period at any business location;

2. No balloon sign and structure shall exceed the height of thirty (30) feet;

3. No balloon sign and structure shall be greater in volume than four thousand five hundred (4,500) cubic feet; and

4. Balloon signs are permitted on rooftops provided balloon signs and balloon structures are securely anchored to the rooftop.

(2) *Bench signs.* Bench signs on benches, controlled or authorized by the Billings MET. Indemnification clause or proof of liability insurance may be required by the city;

(3) *Construction signs.* One (1) building construction sign per construction project not exceeding thirty-two (32) square feet in sign area in residential districts or sixty-four (64) square feet in sign area in all other districts, provided that such signs shall be erected no more than five (5) days prior to the beginning of construction for which a valid building permit has been issued, shall be confined to the site of construction, and shall be removed five (5) days after issuance of an occupancy certificate or completion of construction and prior to occupancy;

(4) *Directional or instructional signs.* Signs which provide direction or instruction and are located entirely on the property to which they pertain and do not exceed four (4) square feet in sign area, signs identifying rest rooms, public telephones, walkways, or signs providing direction such a [as] parking lot entrance and exit signs and those of similar nature. Signs shall not cause visual obstructions to traffic;

(5) *Flags, or pennants.* The flags, emblems or insignia of any nation, political subdivision, corporate flag, corporation, or any other entity or business;

(6) *Garage sale signs.* Garage sale signs not exceeding four (4) square feet in sign area;

(7) *Governmental regulatory signs.* Governmental regulatory signs for control of traffic and other regulatory purposes, street signs, danger signs, railroad

crossing signs, and signs of public service companies indicating danger and aids to service or safety which are erected by or on the order of a public officer in the performance of his or her public duty;

(8) *Historical landmark signs.* Signs identifying structures or landmarks which have been designated as a historical landmark locally or nationally and not located in the historical district. Each landmark or structure is permitted one monument sign, attached or detached, not greater than four (4) square feet in sign area for the attached sign, eight (8) feet in sign area for the detached sign, and not exceeding eight (8) feet in height;

(9) *Holiday decorations or seasonal signs.* Signs of a primarily decorative nature, clearly incidental and customary and commonly associated with any national, local or religious holiday; provided that such signs shall be displayed for a period of not more than sixty (60) consecutive days nor more than sixty (60) days in any one (1) year. Such signs may be of any type, number, area, height, illumination or animation; and shall be set back ten (10) feet from all boundary lines of the lot, provided that a clear area be maintained to a height of seventy-two (72) inches, within fifty-five (55) feet of the intersection of two (2) streets, a railroad and a street and a street and driveway, as measured from the property line;

(10) *House numbers, residential name plates and commercial addresses.* House numbers, residential name plates and commercial addresses not exceeding two (2) square feet in area for each residential building;

(11) *Incidental signs.* Up to two (2) incidental signs may be attached to a free standing sign structure or to a building wall, but may not be attached perpendicular to the wall. Such signs are restricted to trading stamps, credit cards excepted, official notices of services required by law, or trade affiliations. The area of each sign may not exceed five (5) square feet; the total area of all such signs may not exceed ten (10) square feet and will be subtracted from the allowable sign area;

(12) *Interior signs.* Signs located within the interior of any building or stadium, or within an enclosed lobby or court of any building, and signs for and located within the inner or outer lobby, court or entrance of any theater, that are not visible from the public right-of-way. This does not, however, exempt such signs from the structural, electrical or material specifications as set out in this article;

(13) *Memorial signs, plaques, symbols or insignia signs.* Memorial signs, plaques, religious symbols, tablets, identification emblems of religious orders or historical agencies, provided that no such memorial sign, symbol, plaque, tablet or identification emblem shall exceed four (4) square feet in sign area, and provided further that all such memorial signs, symbols, plaques, tablets, and identification emblems shall be placed flat against a building. Names of buildings and date of erection when cut into any masonry surface or inlaid so as to be part of the building are also allowed;

(14) *Neighborhood Watch signs.* Neighborhood Watch signs may be posted on property within residential, residential professional and public zoning districts provided that the total area of all Neighborhood Watch signs on a single

property do not exceed sixteen (16) square feet in sign area. Neighborhood Watch signs shall be posted on private property and may be placed flat against the wall of a building or detached if they do not exceed 8 feet in height and are placed five (5) feet behind all property lines. A detached Neighborhood Watch sign must not exceed thirty-six (36) inches in height if it is placed within a clear vision area at the intersection of streets, streets and alleys or streets and driveways. Please see Section 27-615 and 27-618 of the Unified Zoning Regulations for the definition and illustration of clear vision areas at intersections.

(15) *Notice bulletin boards.* Notice bulletin boards not over twenty-four (24) square feet in area for medical, public, charitable or religious institutions where the same are the primary use located on the premises;

(16) *No-trespassing* or *no-dumping signs.* No-trespassing or no-dumping signs not to exceed one and one-half (1 1/2) square feet in area per sign and not exceeding four (4) in number per lot, except that special permission may be obtained from the sign administrator for additional signs under proven special circumstances;

(17) *Political or campaign signs.* Political or campaign signs on behalf of candidates for public office or measures on election ballots provided that said signs are subject to the following regulations:

a. Such signs may be erected not earlier than forty-five (45) days prior to the primary or special election and shall be removed within fifteen (15) days following the general or special election. If there is no primary election scheduled, then such signs may not be erected earlier than forty-five (45) days prior to the general election. After the primary election, signs pertaining to any candidate or ballot issue not on the general or special election ballot shall be removed within fifteen (15) days after the primary election, unless the candidate is conducting a write-in campaign. This provision does not prohibit a successful primary candidate from erecting additional signs after the primary election or an unopposed candidate at the primary from erecting signs prior to or immediately after the primary election.

b. In any zone, each parcel of land is permitted to display political signs provided that, in total, such signs do not exceed thirty-two (32) square feet in aggregate area and, if detached, do not exceed six (6) feet in height. Signs over thirty (30) inches in height shall comply with the clear vision standards as required by section 27-615 "Visibility at Intersections". Such sign shall not be erected in such a manner as to constitute a roof sign. Notwithstanding the provisions of this subsection, a sign may be placed upon any legally existing sign structure, but not so as to cover an already existing current sign.

c. No political sign shall be located within or over the public right-of-way or on a utility pole.

d. No political sign shall be placed, installed, or erected without the permission of the private property owner.

(17) *Public service signs (notices).* Official notices or other public service information posted by public officers or employees in the performance of their duties;

(18) *Public signs.* Signs required or specifically authorized for a public purpose by any law, statute or ordinance; which may be of any type, number area, height above grade, location, illumination, or animation required by the law, statute or ordinance under which the signs are erected;

(19) *Real estate signs.* One (1) real estate sign on any lot or parcel, provided such sign is located entirely within the property to which the sign applies, is not directly illuminated, does not exceed six (6) square feet in sign area in residential zones and twelve (12) square feet in commercial zones, and is removed within seven (7) days after the sale, rental or lease has been accomplished. "Open house" signs must be placed on private property and shall not be placed on or project over a public right-of-way;

(20) *Subdivision development signs.* Two (2) subdivision development signs per subdivision development project not exceeding thirty-two (32) square feet in sign area in residential districts or sixty-four (64) square feet in sign area in all other districts. This off-site sign may contain advertising in connection with the name of the subdivision, development firm, building contractor, real estate sales firm, and may refer to materials, appliances, supplies and building trades used in construction of the dwelling units, or services provided by the developer. The sign shall be removed six (6) months after the last lot is constructed upon;

(21) *Symbols or insignia signs.* Religious symbols, commemorative plaques of recognized historical agencies, or identification emblems of religious orders or historical agencies, provided that no such symbol, plaque, or identification emblem shall exceed four (4) square feet in area, and provided further that all such symbols, plaques and identification emblems shall be placed flat against a building;

(22) *Warning signs.* Signs warning the public of the existence of danger, but containing no advertising material, of a size as may be necessary, to be removed upon subsidence of danger;

(23) *Window signs.* A sign installed inside a window for purposes of viewing outside the premises.

(Ord. No. 4323, § 1(8), 11-24-80; Ord. No. 83-4537, § 1(8.8.2), 8-8-83; Ord. No. 89-4781, § 8, 2-27-89; Ord. No. 89-4801, § 2, 9-25-89; Ord. No. 91-4887, § 1, 9-23-91; Ord. No. 92-4897, § 1, 1-6-92; Ord. No. 98-5057, § 1, 5-11-98)

## SEC. 27-708. PROHIBITED SIGNS AND SIGN STRUCTURES.

The following types of signs and sign structures are expressly prohibited in all districts, except as otherwise provided by this article.

(1) *Animated and intensely lighted signs:* No signs shall be permitted which are animated by means of flashing, scintillating, blinking or traveling lights or any other means not providing constant illumination (unless specifically permitted in special sign districts). Public service information signs and other electronic message centers classified as "changing signs" are permitted.

(2) *Abandoned signs:* Such business signs that advertise an activity, business, product or service no longer conducted or available on the premises on which the sign is located.

(3) *Parking of advertising vehicles prohibited:* No person shall park any vehicle or trailer on a public right-of-way or public property or on private property so that it is visible from the public right-of-way and which has attached thereto or located thereon any sign or advertising device for the basic purpose of providing advertisement of products or directing people to a business or activity located on the same or nearby property or any other premises. This section is not intended to prohibit any form of vehicular signage such as a sign attached to a bus or lettered on a motor vehicle, or company vehicle signs.

(4) *Swinging signs:* Signs installed on an arm or spar, that is not, in addition, permanently fastened to an adjacent wall or upright pole. See section 27-709(i).

(5) *Unclassified signs:* The following signs are also prohibited, which:

a. Bear or contain statements, words or pictures of an obscene, pornographic, immoral character, or which contain advertising matter which is untruthful;

b. Are painted on or attached to any fence or any wall which is not structurally a part of a building, except to identify a residence or residence structure by means of posting the name of the occupant or structure, and the street address;

c. Operate or employ any stereopticon or motion picture projection or media in conjunction with any advertisements, or have visible moving parts or any portion of which moves, or give the illusion of motion except as permitted in this article;

d. Emit audible sound, odor or visible matter; or

e. Signs which, by reason of their size, location, movement, content, coloring or manner of illumination, may be confused with or construed as a traffic control sign, signal or device, or the light of an emergency or road equipment vehicle, or which hide from view any traffic or street sign or signal or device.

(6) *Unsightly visible frames, or angle iron:* Visible angle iron frames or structures to support projecting signs.

(Ord. No. 4323, § 1(6), 11-24-80; Ord. No. 89-4781, § 9, 2-27-89; Ord. No. 89-4801, §§ 3, 4, 9-25-89)

## SEC. 27-709. CONSTRUCTION SPECIFICATIONS.

(a) *Compliance with building code.* All signs shall comply with the appropriate detailed provisions of the city building code relating to design, structural members and connections. Signs shall also comply with the provisions of the applicable electrical code and the additional construction standards hereinafter set forth in this section.

(b) *Construction of signs, auxiliary specifications:*

(1) *Identification and marking.* Each sign hereafter erected or remodeled shall bear, in a permanent position thereon, a clearly legible identification plate stating the name and address of the owner of the sign, and the person responsible for its construction, erection and the date of erection.

(2) *Obstruction to exits.* No sign shall be erected, constructed or maintained so as to obstruct any fire escape, required exit, window or door opening used as a means of egress.

(3) *Obstruction to ventilation.* No sign shall be attached in any form, shape or manner which will interfere with any opening required for ventilation, except that such signs may be erected in front of and may cover transom windows when not in violation of the provision of the building or fire prevention codes.

(4) *Clearance from high voltage power lines.* Signs shall be located in such a way that they maintain horizontal and vertical clearance of all overhead electrical conductors in accordance with the National Electrical Code specifications, depending on voltages concerned. However, in no case shall a sign be installed closer than twenty-four (24) inches horizontally or vertically from any conductor or public utility guy wire.

(5) *Drainage.* The roofs of all marquees exceeding forty (40) square feet shall be properly guttered and connected with downspouts to storm sewers so that water will not drip or flow into public sidewalks or streets.

(a) *Free-standing signs; materials.* All free-standing sign structures or poles shall be self-supporting structures erected on and permanently attached to concrete foundations. Such structures or poles shall be fabricated only from painted steel or such other materials as may be approved by the building code of the city.

(b) *Electric signs.* The full number of illuminating elements thereof shall be kept in satisfactory working condition or immediately repaired or replaced. All signs shall meet all electrical requirements for that portion directly illuminated. All electric signs shall have a disconnecting switch located in accordance with the provisions of the safety code, including a disconnecting switch on the outside of the sign.

(c) *Glass.* When glass is used for sign letters or transparent panels, it shall be at least double strength thickness for sign areas up to and including three hundred (300) square inches. When glass is used for sign letters or transparent panels for sign areas in excess of three hundred (300) square inches, at least one-quarter inch wire glass shall be used and the maximum span between supports shall be four (4) feet.

(d) *Strength of parapet wall.* A parapet wall must be designed for and have sufficient strength to support any sign which is attached thereto.

(e) *Supports and braces.* Metal supports or braces shall be adequate for wind loadings (see subsection (h)). Wire or cable supports shall have a safety factor of four (4). All metal, wire cable supports and braces and all bolts used to attach sign to bracket or brackets and signs to the supporting building or structure shall be of galvanized or of an equivalent material. There shall be no visible angle irons, or unsightly supports. All such sign supports shall be an integral part of the sign design. There shall be a pole cover on all free-standing signs unless the pole is an integral part of the sign.

(f) *Wind loads.* All signs, except those attached flat against the wall of a building shall be constructed to withstand wind loads as prescribed in the most current edition of the Uniform Building Code.

(g) *Sign anchoring.* No sign shall be suspended by chains or other devices that will allow the sign to swing due to wind action. Signs shall be anchored to prevent any lateral movement that would cause wear on supporting members or connections.

(Ord. No. 4323, § 1(7), 11-24-80; Ord. No. 89-4781, § 10, 2-27-89)

## SEC. 27-710. REMOVAL AND DISPOSITION OF SIGNS.

(a) *Maintenance and repair.* Every sign including but not limited to those signs for which permits or for which no permits or permit fees are required, shall be maintained in a safe, presentable and good structural material condition at all times, including the replacement of defective parts, painting, repainting, cleaning and other acts required for the maintenance of the sign. The sign administrator shall require compliance with all standards of this article. If the sign is not made to comply with adequate safety standards, the sign administrator shall require its removal in accordance with this section.

(b) *Abandoned signs.* Except as otherwise provided in this article, any sign which is located on property which becomes vacant and unoccupied for a period of three (3) months or more, or any sign which pertains to a time, event, or purpose which no longer applies, shall be deemed to have been abandoned. Permanent signs applicable to a business temporarily suspended because of a change of ownership or management of such business shall not be deemed abandoned unless the property remains vacant for a period of six (6) months or more. An abandoned sign is prohibited and shall be removed by the owner of the sign or owner of the premises.

(c) *Dangerous or defective signs.* No person shall maintain or permit to be maintained on any premises owned or controlled by such person any sign which is in a dangerous or defective condition. Any such sign shall be removed or repaired by the owner of the sign or the owner of the premises.

(d) *Unlawful signs.* No person shall erect on any premises owned or controlled by such person any sign which does not comply with the provisions of this article.

(e) *Street improvement projects.* Any sign projecting over a public right-of-way on November 24, 1980 which was subject to removal or relocation at the owner's expense, pursuant to a permit or other ordinance of the city, shall be removed by the owner or altered at the owner's expense to comply with the regulations of this article if, as the result of, or after completion of a street improvement project, the sign does not or would not comply with the provisions of this article.

(f) *Removal of signs by the sign administrator.* The sign administrator shall cause to be removed any sign that endangers the public safety such as an abandoned, dangerous, or materially, electrically or structurally defective sign or a sign for which no permit has been issued. The sign administrator shall prepare a notice which shall describe the sign and specify the violation involved and which shall state that if the sign is not removed or the violation is not corrected within ten (10) days, the sign shall be removed in accordance with the provisions of this section.

All notices mailed by the sign administrator shall be sent by certified mail. Any time periods provided in this section shall be deemed to commence on the date of the receipt of the certified mail.

For all other signs, the notice shall be mailed to the owner of the property on which the sign is located as shown on the last equalized assessment roll. If known, or with reasonable care should be known, the notice shall be mailed to or delivered to the owner of the sign and the occupant of the property.

Any person having an interest in the sign or the property may appeal the determination of the sign administrator ordering removal or compliance by filing a written notice of appeal with the board of adjustment.

The sign administrator may without notice cause immediate removal of a dangerous or defective sign or a temporary sign or a temporary sign not exhibiting a current validation sticker.

Temporary signs are specifically excluded from the foregoing notice requirements. Violators of ordinances pertaining to temporary signs may immediately be cited without advance notice.

For the purpose of removal, signs shall also include all sign structures.

(Ord. No. 4323, § 1(9), 11-24-80; Ord. No. 86-4701, § 2, 7-7-86; Ord. No. 89-4781, § 11, 2-27-89)

## SEC. 27-711. LEGAL NONCONFORMING SIGNS.

(a) *Notification of nonconformity*. After November 24, 1980, the sign administrator shall, as soon as practicable, survey the city for signs which do not conform to the requirements of this article. Upon determination that a sign is nonconforming, the sign administrator shall use reasonable efforts to notify, in writing, the user or owner of the property on which the sign is located of the following: (i) the sign's nonconformity; and (ii) whether the sign is eligible for characterization either as legal nonconforming or unlawful. Failing determination of the sign owner, user or owner of the property on which the sign is located, the notice may be affixed in a conspicuous place to the sign or to the business premises with which the sign is associated.

(b) *Signs eligible for characterization as "nonconforming."* Any sign located within the city limits on November 24, 1980, or located in an area annexed to the city thereafter, which does not conform with the provisions of this article, is eligible for characterization as a "nonconforming" sign and is permitted, provided it also meets the following requirements:

(1) The sign was covered by a sign permit or variance on November 24, 1980 if one (1) was required under applicable law; or

(2) If no sign permit was required under applicable law for the sign in question, the sign was in all respects in compliance with applicable law on November 24, 1980.

(c) *Loss of legal nonconforming status*. A legal nonconforming sign shall immediately lose its legal nonconforming designation if:

(1) The sign is altered in any way in structure or copy except for changeable copy signs and normal maintenance;

(2) The sign is relocated;

(3) The sign is replaced; or comes under the classification of a temporary sign as defined by this article;

(4) On the happening of any one of (1), (2), or (3), the sign shall be immediately brought into compliance with this article with a new permit secured therefor, or shall be removed.

(d) *Maintenance and repair*. Nothing in this section shall relieve the owner or user of a legal nonconforming sign or owner of the property on which the legal nonconforming sign is located from the provision of this article regarding safety, maintenance and repair of signs, contained in this article, provided, however, that any repainting, cleaning and other normal maintenance or repair of the sign or sign structure shall not modify the sign structure or copy in any way which makes it more nonconforming or the sign may lose its legal nonconforming status.

(Ord. No. 4323, § 1(10), 11-24-80; Ord. No. 83-4537, § 1(8.10.1), 8-8-83)

## SEC. 27-712. SPECIAL SIGNS AND SIGN DISTRICTS.

(a) *Signs for special events.* Temporary signs, not in excess of four (4) square feet in area, may be erected as participation in public parades, public events or public celebrations for a period not to exceed ten (10) days, provided, however, the erection of such signs shall be approved by the sign administrator.

(b) *Nonexempt signs for direction or instruction.* Signs in excess of eight (8) square feet in area which provide traffic direction or instruction to the public shall be allowed in any zone, provided such signs are located entirely on the property to which they pertain. In addition, the sign administrator may authorize the placing of directional signs at appropriate street intersections or other locations for the convenience of the motoring public; such signs shall pertain to places of general interest such as schools, hospitals, public buildings, airports, fairgrounds and other similar public service facilities.

(c) *Special sign districts.* Merchants occupying sixty (60) percent or more of the street frontage in feet of properties on both sides of the street in any defined area may petition the city for the formation of a special sign district. This might be done for such reasons as to create an area with a particular ethnic atmosphere, to simulate an historic period, theatre or entertainment area, or other similar purpose. A group of property owners or persons in the right of possession will be chosen by the merchants to represent them. The group shall not exceed ten (10) members and shall comprise the governing body of the sign district. This body will draw to the criteria for signs in the district and submit such criteria to counsel for approval. The council will instruct the city clerk to notify all owners or persons in the right of possession within the boundaries of such district ten (10) days prior to the hearing, after which the council may approve the special sign district or may veto it. The veto can only be effected by a three quarters vote of the council. If the criteria for the special sign district are approved and become effective, the city shall publish them as regulations of a sign district in the same manner as a code of the city.

(Ord. No. 4323, § 1(11), 11-24-80; Ord. No. 89-4781, § 12, 2-27-89)

## SEC. 27-713. RESERVED.

**Editor's note:** Section 13 of Ord. No. 89-4781, adopted Feb. 27, 1989, repealed § 27-713, relative to signs in the historic district, which derived from Ord. No. 85-4650, §§ 1, 2, adopted July 22, 1985.

## SECS. 27-714--27-729. RESERVED.

## DIVISION 2. MONTANA AVENUE SIGN DISTRICT*

### [SEC. 27-730. MONTANA AVENUE SIGN DISTRICT CREATED.]

[Pursuant to section 27-712(c) of the Unified Zoning Regulations, the Montana Avenue sign district is hereby created.]
(Ord. No. 99-5098, 8-9-99)

***Editor's note:** Ord. No. 99-5098, § 1, adopted Aug. 9, 1999, amended the Code by adding provisions designated as sections 27-713(1)--27-713(14). In order to better conform to the format of the Code, the editor has redesignated the provisions of Ord. No. 99-5098 as Division 2 of Article 27-700, §§ 27-731--27-744.

### SEC. 27-731. DISTRICT BOUNDARIES.

The Montana Avenue sign district extends from the centerline of North 22nd Street to the centerline of North 30th Street along Montana Avenue. The district extends from Montana Avenue north to the alley along any side street and from Montana Avenue south to the railroad tracks along any side street. (See attached map).

(Ord. No. 99-5098, 8-9-99; Ord. No. 04-5286, § 1, 6-14-04)

### SEC. 27-732. PURPOSE.

Due to the unique character of the historic district located on Montana Avenue, these regulations are designed to encourage the preservation, revitalization, and enhancement of the district through the use of appropriate signage. These regulations also encourage compatibility of the signage with the historic character of the district.
This district shall not regulate official traffic or government signs; the copy and message of signs; signs not intended to be viewed from a public right-of-way; window displays; product dispensers and point of purchase displays; flags of any nation, government, or fraternal organization; barber poles; religious symbols; or any display or construction not defined herein as a sign.

Thus, the primary intent of this district shall be to regulate signs of a commercial nature intended to be viewed from vehicular or pedestrian public right-of-way.

(Ord. No. 99-5098, § 1, 8-9-99)

### SEC. 27-733. DEFINITIONS.

Words and phrases used in this division have the meanings set forth in this section.

*Animated sign:* Any sign that uses movement or change of lighting to depict action or create a special effect or scene.

*Area of sign:* The entire area of a sign including the area within a perimeter which forms the outside shape including the frame, forming an integral part of the display, but excluding the necessary supports or uprights on which the sign may be placed. The frame of a sign may be excluded frame of a sign may be excluded from the area where such frame conveys no message and is constructed or affixed for aesthetic reasons beyond the necessary supports.

For computing the area of any wall or canopy sign which consists of letters mounted or painted on a wall or canopy, the area of the smallest rectangular figure which can encompass all of the letters.

*Awning or canopy sign:* Any sign that is a part of or attached to any awning, or canopy over a door, entrance, window, or outdoor service area, which does not extend horizontally beyond the limits of the canopy.

*Banner sign:* Any sign (other than an official flag) made of cloth, paper, or fabric of any kind, which is used to attract attention, whether or not imprinted with words or characters.

*Billboard/third party advertiser:* A sign that advertises products or services not sold or distributed on the premises on which the sign is located.

*Building marker:* Any sign indicating the name of a building, date, or other incidental information about its construction. A sign that is cut into a masonry surface or made of bronze or other permanent material.

*Building frontage:* The linear length of a building facing the public access or right-of-way.

*Copy:* The graphic content of a sign surface in either permanent or removable letter, pictographic, symbolic, or alphabetic form.

*Ghost signs:* Faded painted advertisements painted prior to 1935.

*Lighting:* Flashing action (animation). Neon and incandescent lamps may flash in the following ways.

(1) *Alternating.* One (1) section comes on as another goes off.

(2) *Scintillating.* Random sections go on and off with part of the lighting on at all times.

(3) *Chasing.* one (1) section comes on at a time and is followed by one section going off at a time. Part of the sign is on at all times.

(4) *Sweeping (filling).* The lighting sections individually go on until all of the sections are on, then the entire group goes off and then the process is repeated.

(5) *On-off action.* Not allowed. Lighting that goes all on and then all off.

*Nonconforming sign:* A sign that was erected legally but does not comply with subsequently enacted sign restrictions and regulations.

*Parcel:* A single tract or parcel of land, no matter how legally described whether by metes and bounds, certificate of survey, and/or by lot or lots and block designation as in a recorded plat, that at the time of applying for a building permit is designated by its owner or developer as the tract to be used, developed or built upon as a unit of land under single ownership or control and assigned to the particular use for which the building permit is being secured and having frontage on or access to a public street over an easement approved by the city engineer.

*Primary public entrance:* An entrance to a business which is open to the public during its normal and customary hours of operations and the entrance is used as the primary ingress and egress to the business by the public.

*Projecting sign:* A sign, other than a flat wall sign, which is attached to and projects from a building, wall, or other structure not specifically designed to support the sign. Supports shall be covered in a neat and orderly fashion.

*Public right-of-way width:* The perpendicular distance across a public street measured from property line to property line. When property lines on opposite sides of the public street are not parallel, the city engineer shall determine the public right-of-way width.

*Pylon/ground sign:* Any sign supported by structures or supports that are placed on or anchored in, the ground that are independent from any building or structure, including monument signs.

*Sign height:* The vertical distance measured from the highest point of the sign to the crown of the adjacent street.

*Street:* A public way for vehicular traffic, whether designated as a street, highway, thoroughfare, parkway, road, avenue, boulevard, lane, place, or however otherwise designated which has been dedicated to or acquired for public use and extends the full width between right-of-way lines.

(Ord. No. 99-5098, § 1, 8-9-99)

## SEC. 27-734. MONTANA AVENUE SIGN REVIEW COMMITTEE.

(a) *Organization and duties.* The Montana Avenue sign review committee (committee) will consist of seven (7) committee members. Four (4) of the members shall be property owners or merchants of the Montana Avenue sign district, one (1) architect or design professional with a background in historic preservation, one (1) sign professional, and the city sign administrator. All members shall be voting members except for the city sign administrator. The committee is responsible for the review and approval of all sign permit applications within the Montana Avenue sign district.

The terms for each member, except the sign administrator, will serve two-year terms. Three (3) members of the initial committee will serve three-year terms, in order to stagger the terms of the committee members.

Any person interested in serving on the committee shall make application to the Montana Avenue Property Owners. The property owners will then forward the applications and their recommendation to the mayor of the City of Billings. The mayor will then make the necessary appointments to the committee to fill any vacancies.

(b) *Proceedings.* The committee shall schedule two (2) regular meetings, along with special meetings that may also be called by the chairperson. The chairperson may cancel the regularly scheduled meetings if no matters are pending for the committee's consideration. All meetings shall be open to the public.

(c) The committee, at the first meeting, shall establish by-laws that will establish procedures for selecting a chairperson, terms of the officers, meeting days, and other necessary functions of the committee.

The committee shall keep minutes of its proceedings, showing the vote of each member, or if absent or failure to vote, indicating such fact, and shall keep records of its official actions, all of which shall be a public record and shall be filed in the office of the Yellowstone County

board of planning. The official minutes of the committee shall become effective immediately, unless otherwise directed by the committee. The city sign administrator in coordination with the committee shall designate a secretary of the committee and shall be the custodian of all records of the meetings, finding, conclusions and order of the committee.

(d) *Powers and duties.* The committee shall have the following powers:

The committee will review the sign application for compliance with the guidelines set forth and for compatibility with the structure and the district. The permit application will be evaluated on a point system. All signs shall be required to conform to specific standards as outlined in this division.

(e) *Decisions and appeals.* The concurring vote of four (4) members of the committee shall be necessary to decide in favor of an application in order for the applicant to receive a sign permit. Any person aggrieved by any decision of the committee may appeal the decision by presentation to the City of Billings city board of adjustment as outlined in section 27-1505 of the Unified Zoning Regulations.

(Ord. No. 99-5098, § 1, 8-9-99)

## SEC. 27-735. GENERAL SIGN CRITERIA.

In the Montana Avenue sign district all signs must receive approval by the sign committee. A set of both absolute and relative criteria has been established which gives the assurance that the signs erected are compatible with the nature and character of this district and to encourage creativity that is not permitted under traditional sign regulations.
An applicant must meet all the absolute criteria to qualify for a permit. In addition the applicant must also attain a minimum of at least seventy (70) percent of the maximum points possible, in order to obtain a sign permit, in the relative category.

(Ord. No. 99-5098, § 1, 8-9-99)

## SEC. 27-736. SPECIFIC CRITERIA.

(a) The absolute criteria must be satisfied before approval can be granted. This includes sign type, number, size, and location. Each of the applicable absolute criteria must be answered yes before approval can be granted.

(b) Relative criteria are assessed using a "point" system. Each sign must achieve a specified minimum percentage of these criteria. A score above the minimum percentage may be used to receive extra points. The absolute criteria are designed to reduce the negative impacts, while the relative criteria focus on the actual design of a sign including, but not limited to: compatibility with the building's architecture, the design compatibility with the era of the district, building, color, location on the building, materials used, lighting, size, and dimensions, and creativeness of design. The design of a sign is evaluated against the relative criteria and scored on a point chart.

(c) A sign shall be evaluated as follows:

(1) *Absolute criteria.* Each of the absolute criteria is answered yes, no, or not applicable. A "no" answer to any applicable absolute criteria will automatically exclude the application, as proposed, from further consideration

at that time. Modifications will need to be made to correct any problems before further consideration will be given to the sign proposal.

(2) *Relative criteria.* The signage plan is evaluated against each applicable relative criterion and assigned a "score." A sign may receive a score of 0 to 10, with 10 being the highest. The numerical score is assigned based on the following (Only 0, 5, and 10 are defined as points of reference):

10 = For an excellent job of implementing the criteria or for doing the best job possible, given the constraints and opportunities of the site.

5 = For an adequate job of implementing the criterion.

0 = For no effort or failure to implement the criterion.

(Ord. No. 99-5098, § 1, 8-9-99)

**SEC. 27-737. PERMITTING PROCEDURE.**

All sign applications shall be submitted to the City of Billings sign administrator. Deadline dates for the application will be the first and third Monday of each month. At the time the application is submitted, the sign administrator will review the application for completeness. If the application is not complete, it will be returned to the applicant. The complete application then will be forwarded to the Montana Avenue sign review committee.

(1) It will be the responsibility of the city sign administrator to process permit requests under this system in the following manner:

a. An applicant will submit his/her application for a sign permit. An application will contain, but not be limited to the following information:

1. A completed sign permit application form;

2. A dimensioned site plan showing the sign location (if applicable);

3. Building elevation drawings showing the location of all existing signs and the location of the sign being applied for;

4. A scaled drawing of the sign including: sign design, types of material, colors, style of lettering, etc.

b. The sign administrator will, at that time, review the application for completeness. If the application is incomplete, it will be returned to the applicant.

c. Upon receipt of a complete application, the sign administrator will notify the applicant of the meeting date, time, and location with the Montana Avenue sign review committee.

d. The review will result in approval, disapproval, or approval with modifications. Once approval has been granted the sign administrator will issue the permit upon receipt of payment.

e. A sign permit application will be valid for one hundred twenty (120) days. The application may be extended for one (1) additional sixty-calendar-day period. The request for extension must be in writing and received five (5) business days prior to the expiration of the sign permit.

f. A permit that has expired, or granted an extension and then expired, will be required to go through the review process again, however, the fee will be one-half ( 1/2) of the full permit fee.

(Ord. No. 99-5098, § 1, 8-9-99)

## SEC. 27-738. SIGN TYPES PERMITTED.

[The following sign types are permitted.]

| Sign Type | Sign Area | Sign Height | Number of Signs |
|---|---|---|---|
| *Building Signs*<br>• Awning sign<br>• Canopy sign<br>• Marquee sign<br>• Projecting sign<br>• Roof sign<br>• Under awning/canopy sign<br>• Wall sign<br>• Window sign | • 1 1/2 square feet of signage per lineal foot of building measured along the street frontage for corner lot buildings, up to a maximum of 200 square feet.<br>• 3 square feet of signage per lineal foot of building measured along the street frontage for interior lot buildings, up to a maximum of 75 square feet. | N/A | • One sign per street frontage and one sign per public entrance. Signage on an awning or canopy will count as one (1) sign.<br>• Window signs are not included in the total number of signs allowed. However, the area of window signs installed shall be counted as part of the total allowable sign area.<br>• Signage placed upon an awning or canopy will count as one (1) sign for that awning or canopy regardless of the number of sides of the awning or canopy that have signage.<br>• Signage placed on the only valance of multiple awnings that is related to a specific business may count as one (1) sign upon approval of the Montana Avenue Sign Committee. |
| *Ghost Signs* | N/A provided the sign was created prior to 1935 | N/A; | N/A |
| *Pylon/Ground Sign* | A maximum of 50 square feet | Maximum 20 feet | One (1) per street frontage. If a parcel has two (2) signs, and a 150-foot separation, measured along the property line, between signs is required. |

(Ord. No. 5098, § 1, 8-9-99)

## SEC. 27-739. PYLON/GROUND SIGNS--ABSOLUTE CRITERIA.

(a) Point chart for pylon signs--Absolute criteria:

| ABSOLUTE CRITERION | Is the Criterion Applicable? Yes | No | Is the Criterion Complied With Yes | No |
|---|---|---|---|---|
| Sign size (area) | | | | |
| Sign height | | | | |
| Number of signs | | | | |
| Distance between signs | | | | |
| Clearance between sign and ground | | | | |
| Clear vision | | | | |

A proposal must receive a "yes" answer to all applicable criteria in order to qualify for approval.

(b) Sign size (area): What is the area of the sign in square feet?

Pylon/ground signs may not exceed 50 square feet in area.

| | Sign Area | Criterion Complied With Yes | No |
|---|---|---|---|
| Montana Avenue Sign Committee | | | |
| Applicant | | | |

(c) Sign Height: Does the sign comply with the height limit set forth by this article?
Pylon Sign: The maximum height of a pylon sign shall not exceed twenty (20) feet.

| | Sign Height | Criterion Complied With Yes | No |
|---|---|---|---|
| Montana Avenue Sign Committee | | | |
| Applicant | | | |

(d) Number of signs: Does the number of pylon signs comply with the requirements of this section?

Pylon/ground signs: Each developed parcel shall be permitted one (1) pylon sign per street frontage.

| | Number of Signs | Criterion Complied With Yes | No |
|---|---|---|---|
| Montana Avenue Sign Committee | | | |
| Applicant | | | |

(e) Distance between Signs: What is the distance between the two- (2) pylon signs shown on the site plan?

Pylon Signs: Where a developed parcel is permitted to have more than one (1) pylon sign under this article, the distance between the pylon signs on each parcel shall be no less than one hundred fifty (150) frontage feet measured along the property lines.

| | Distance Between Signs | Criterion Complied With Yes | No |
|---|---|---|---|
| Montana Avenue Sign Committee | | | |
| Applicant | | | |

(f) Pylon sign setback/sign clearance from the ground: Does the pylon sign meet the required setback from the property line and/or clearance from the ground?

Pylon Signs: A five-foot minimum setback from the property line to the leading edge of the sign shall be required. The leading edge of a sign may be placed on the property line provided there is a distance of twelve (12) feet from grade to the bottom of the sign. A sign shall not project over the public right-of-way.

| | Sign Setback/Clearance | Criterion Complied With Yes | No |
|---|---|---|---|
| Montana Avenue Sign Committee | | | |
| Applicant | | | |

(g) Clear Vision: Does this pylon sign meet the clear vision requirements of Section 27-618 of the Unified Zoning Regulations?

| | Clear Vision | Criterion Complied With Yes | No |
|---|---|---|---|
| Montana Avenue Sign Committee | | | |
| Applicant | | | |

(Ord. No. 99-5098, § 1, 8-9-99)

## SEC. 27-740. POINT CHART FOR BUILDING SIGNS-ABSOLUTE CRITERIA.

| ABSOLUTE CRITERION | Is the Criterion Applicable? Yes No | Is the Criterion Complied With Yes No |
|---|---|---|
| Sign type | | |
| Sign size (area) | | |
| Number of signs | | |
| Distance between signs | | |
| Clearance between sign and ground | | |
| Clear vision | | |

(a) Sign type: Does the sign comply with the permitted building signs?

The following are the types of signs that may be attached to a building:

Wall signs

Awning signs

Canopy signs

Under-canopy signs

Roof signs

Projecting signs

Window signs (signs placed on the exterior or interior of the window)

Marquee signs (may be used only on theaters)

| | Sign Type | Criterion Complied With Yes | No |
|---|---|---|---|
| Montana Avenue Sign Committee | | | |
| Applicant | | | |

(b) Sign size (area): What is the total area in square feet of all building signs?

Building signs: The total square footage of all signs placed on the building shall not exceed one and one-half (1 1/2) square feet in sign area for each lineal foot of building frontage for buildings on corner lots, not to exceed a total of two hundred (200) square feet. (i.e. A building that is twenty-five (25) feet wide may have a total of thirty-seven and one-half (37.5) square feet of signage.)

For buildings on interior lots the total square footage of all signs placed on the building shall not exceed three (3) square feet in sign area for each lineal foot of building frontage, not to exceed a maximum of seventy-five (75) square feet.

A window sign may not cover more than 25% of the area of a window in which the sign is placed.

The area of an awning sign placed on the slope portion of the awning, the sign may not exceed twenty-five (25) percent of the sloped area of the awning. Awning must be made of fabrics that represent the historic material. Awnings made of glossy vinyl coated material are not allowed.

| | Sign Area | Criterion Complied With Yes | No |
|---|---|---|---|
| Montana Avenue Sign Committee | | | |
| Applicant | | | |

(c) Number of signs: Does the number of signs comply with the requirements of this section?

Building signs: There may be one (1) sign per street frontage and one (1) sign per public entrance. (Note: Window signs do not count towards the total number of building signs allowed; however, the area of all window signs shall be included in the total square footage of building signs permitted for a development.)

Signage placed upon an awning or canopy will count as one (1) sign for that awning or canopy regardless of the number of sides of the awning or canopy have signage.

Signage placed on the only valance of multiple awnings that is related to a specific business may count as one sign upon the approval of the Montana Avenue sign committee.

| | Number of signs | Criterion Complied With Yes | No |
|---|---|---|---|
| Montana Avenue Sign Committee | | | |
| Applicant | | | |

(d) Distance from the vertical edge of building: How far from the vertical edge of the building is the projecting sign?

Projecting signs shall be at least five (5) feet, measured horizontally, from the vertical edge of the building. This does not apply to building on corner lots.

| | Distance From Vertical Edge of Building | Criterion Complied With Yes | No |
|---|---|---|---|
| Montana Avenue Sign Committee | | | |
| Applicant | | | |

(e) Projection from wall: How far from the wall does the sign project from the face of the building?

Wall signs may not extend more than twelve (12) inches from the face of the building.

Projecting signs, awnings, and canopies shall not extend more than two-thirds ( 2/3) the distance of the width of the sidewalk.

| | Projection From Wall | Criterion Complied With Yes | No |
|---|---|---|---|
| Montana Avenue Sign Committee | | | |
| Applicant | | | |

(f) Sign Clearance: Does the sign comply with the required clearance for awning and canopy signs from the ground?

Awning and canopies must be at least eight (8) feet above the ground.

The vertical height limit for signage placed upon a canopy is twenty-four (24) inches.

Signage placed on a valance of an awning may not exceed twelve (12) inches in height.

| | Sign Clearance | Criterion Complied With Yes | No |
|---|---|---|---|
| Montana Avenue Sign Committee | | | |
| Applicant | | | |

(g) Sign location/placement: Is the sign placed in a permitted location on the building, awning, and/or canopy?

Permitted signs may be transferred from one wall to another wall provided the number of signs remains within the allowed number of signs permitted and within the allowable sign area.

Signage may be placed on the valance of an awning. Signage on the end of an awning may only be located on the valance. Signage may also be placed on the sloped portion of an awning.

Projecting signs must be setback from the edge of the building a least five (5) feet.

Signs shall not cover any architectural features of the building.

| | Sign Location/Placement | Criterion Complied With | |
|---|---|---|---|
| | | Yes | No |
| Montana Avenue Sign Committee | | | |
| Applicant | | | |

(h) Roof signs: Was a roof sign previously on the building? Is documentation provided?

Roof signs shall be permitted only if the sign is historically correct to the specific building. Documentation must be provided.

| | Roof Signs | Criterion Complied With | |
|---|---|---|---|
| | | Yes | No |
| Montana Avenue Sign Committee | | | |
| Applicant | | | |

(i) Ghost signs: Is the ghost sign, which was created prior to 1935, being stabilized or being restored?

Ghost signs that were created prior to prior to 1935 shall be permitted. These signs will not count toward the allowable square footage or allowable number of signs. Ghost signs are encouraged provided they meet the following conditions:

(1) Ghost signs shall be permitted to fade, to be stabilized, or restored to the original condition.

(2) Any ghost sign that is changed, or any post-1935 ghost sign that is restored or changed shall comply with the Montana Avenue sign district regulations.

| | Number of Signs | Criterion Complied With | |
|---|---|---|---|
| | | Yes | No |
| Montana Avenue Sign Committee | | | |
| Applicant | | | |

## SEC. 27-741. POINT CHART FOR ALL SIGNS--RELATIVE CRITERION.

A score of seventy (70) percent of all applicable relative criteria is required.

(To be completed by the Montana Avenue sign district review committee)

Each applicable criterion is to be evaluated on a scale of one (1) to ten (10). Each project is required to obtain a score of at least seventy (70) percent of the total maximum points. For example, a sign does not use neon or lighting, the maximum number of points for the remaining criteria is seventy (70). The application would be required to obtain at least forty-nine (49) points for approval.

| RELATIVE CRITERION | Is the Criterion Applicable<br>Yes No | Awarded Score<br>0--10 | Points Earned |
|---|---|---|---|
| Sign scale | | | |
| Compatibility with building architecture | | | |
| Color | | | |
| Sign materials | | | |
| Sign design/creativity | | | |
| Historical significance | | | |
| Use of Neon | | | |
| Lighting | | | |
| Placement of sign | | | |
| | | | |
| *TOTAL* | | | |

(a) Sign Scale: The scale of the sign (size, bulk, and height) should be appropriate for the building upon which they are placed and the area in which they are located. The size and shape of a sign should be proportionate with the scale of the structure.

| Sign Scale | |
|---|---|
| Montana Avenue Sign Committee | Recommended Score |
| | |
| | |
| | |
| Applicant | Requested Score |
| | |
| | |
| | |

| *Points* | *Scale of Sign* |
|---|---|
| 10 | Achieves the highest possible compatibility in sign size, bulk, and height with respect to building characteristics and architectural features. Maximum effort was made to be harmonious with adjacent, existing signs and structures. |
| 5 | Makes an effort to be compatible or harmonious in sign size, bulk, and height with the building characteristics and architectural features, as well adjacent signs and structures. |

*Points* *Sign Color*

10 Achieves the highest possible use of color with respect to the building characteristics and architectural features. Maximum effort was made to be harmonious with adjacent, existing signs and structures.

5 Makes an effort to be compatible or harmonious in the use of color with respect to the building characteristics and architectural features, as well adjacent signs and structures.

0 No effort is made for the compatibility of sign size, bulk, or height.

(d) Sign materials: The material used in the manufacturing of the sign should either be materials traditional to the time period of the structure, such as wood, stone, metal, neon, or a modern material that effectively simulates the original materials.

| Sign Materials | |
|---|---|
| Montana Avenue Sign Committee | Recommended Score |
| | |
| | |
| | |
| Applicant | Requested Score |
| | |
| | |
| | |

*Points* *Sign Materials*

10 Achieves use of materials that is most appropriate in terms of compatibility with the historic character of sign and the building. Maximum effort was made to use historic materials or modern materials that effectively simulate historic materials.

5 Makes an effort to use historic materials or modern materials that effectively simulate historic materials.

0 No effort is made to use historic materials or modern materials that effectively simulate historic materials.

(e) Sign design/creativity: Creativity and innovation in design is encouraged. The design, however, should be compatible with the character of the Montana Avenue sign district. The use of symbols and logos is encouraged when used in place of words to identify the use, such as an ice cream cone for an ice cream shop or the logo of a business in lieu of the name on an awning. The sign design should reflect the historic character of the district.

| Sign Design/Creativity | |
|---|---|
| Montana Avenue Sign Committee | Recommended Score |
| | |
| | |
| | |
| Applicant | Requested Score |
| | |
| | |
| | |

*Points* *Sign Design/Creativity*

10 Achieves a design that is either historic in nature or compatible with the character of the business, district and the building. Maximum effort was made to create an innovative and compatible design.

5 Makes an effort to create an innovative and compatible design.

0 No effort to be innovative or creative in sign design.

(f) Historical significance: The design and context of the sign is historically significant to the structure. This would include the use of signs, verified by documentation, that either are existing historic signs (i.e. The Rex) or signs that recreate the original building signs with minor modifications, such as a change in the business name or text.

| Historical Significance | |
|---|---|
| Montana Avenue Sign Committee | Recommended Score |
| | |
| | |
| | |
| Applicant | Requested Score |
| | |
| | |
| | |

*Points* *Historic Significance*

10 Achieves a design with historical significance through the use of an existing historic sign or a reproduction of a historic sign.

5 Makes an effort to use historic signage or elements of a historic sign in the creation of a new sign.

0 No effort is made for the use of historically significant signage.

(g) Use of neon: The use of neon is encouraged when done in a manner that is historic in nature, compatible, or complementary to the character of the district and adjacent signage. The use of neon should be incorporated into the design of the sign.

| Use of Neon | |
|---|---|
| Montana Avenue Sign Committee | Recommended Score |
| | |
| | |
| | |
| Applicant | Requested Score |
| | |
| | |
| | |

*Points* *Neon*

10 Achieves a use of neon that is historic in nature, compatible, or complementary to the character of the district and adjacent signage. Maximum effort was made to use neon in a manner appropriate to the character of the district, building, and adjacent signage.

5 Makes an effort to use neon in a historical, compatible, or complementary manner.

0 No effort is made to use neon in a matter that is historic, compatible, or complementary to the character of the district or the structure.

(h) Use of lighting: The use of lighting should be sensitive to the character of the district. Direct lighting through the use of fixtures such as goose neck lamps is encouraged. Back lighted solid letters or stained glass is encouraged. The use of back lighted, molded plastic faces is discouraged. Installation must comply with the applicable electrical codes. All raceways, exposed conduits and supports will be painted to match or compliment the building.

(1) Neon tubing used in graphics and outlining of signs 60-milliamp maximum.

(2) Incandescent lamps. Exposed up to 20-watt, used in graphics and outlining of signs, awnings and structures. Exterior lighting used to light signs or other objects that shall not exceed one hundred fifty (150) watts and should be concealed in a reflector or fixture that relates to the historical area theme or the building architecture.

(3) Fluorescent. Up to eight hundred (800) MA may be used behind glass or to interior illumination acrylic letter faces on opaque backgrounds.

(4) Downlighting. Shielded reflector or recessed incandescent, mercury vapor or metal halide up to one hundred fifty (150) watts.

(5) Building lighting. The fixtures used will be disguised in an enclosure that will represent some architectural detail from the building. The fixtures shall not project more than 3' from the building surface.

(6) Flashing action (animation). Neon and incandescent lamps may flash in the following ways.

a Alternating. One section comes on as another goes off.

b. Scintillating. Random sections go on and off with part of the lighting on at all times.

c. Chasing. One section comes on at a time and is followed by one section going off at a time. Part of the sign is on at all times.

d. Sweeping (filling). The lighting sections individually go on until all of the sections are on, then the entire group goes off and then the process is repeated.

e. On-off action--not allowed. Lighting that goes all on and then all off.

| Use of Lighting | |
|---|---|
| Montana Avenue Sign Committee | Recommended Score |
| | |
| | |
| | |
| Applicant | Requested Score |
| | |
| | |
| | |

*Points* *Lighting*

10 Achieves a use of lighting that enhances the signage and the building's architecture. Maximum effort was made to use lighting in a manner that emphasizes the continuity of the structure's surface and creates a more intimate ambiance on the street.

5 Makes an effort to use lighting in a manner that compliments and enhances not only the sign but also the structure and the district.

0 No effort is made to use lighting as tool to enhance the sign or the structure.

(i) Use of sign placement: Appropriate sign placement enhances the structure and district. Signs should not be placed over significant architectural building features. Sign placement can be used to decrease sign clutter, create visibility for the business and direct pedestrian and automobile traffic effectively.

| Use of Sign Placement | |
|---|---|
| Montana Avenue Sign Committee | Recommended Score |
| | |
| | |
| | |
| Applicant | Requested Score |
| | |
| | |
| | |

| *Points* | *Sign Placement* |
|---|---|
| 10 | Achieves placement of signage that enhances the building's features and compliments adjacent signage. Maximum effort was made to place the new sign in a manner that displays the message effectively; and |
| 5 | Makes an effort to use historic materials or modern materials that effectively simulate historic materials. |
| 0 | No effort is made to use historic materials or modern materials that effectively simulate historic materials. |

(Ord. No. 99-5098, § 1, 8-9-99)

## SEC. 27-742. NONCONFORMING SIGN.

Any sign located within this district prior to the formation of the Montana Avenue sign district that does not conform with the provisions of this district is eligible for characterization as a "nonconforming" sign and is permitted, provided it also meets the following requirements:

(1) The sign was covered by a sign permit or variance prior to formation of this district, if one was required under applicable law; or

(2) If no sign permit was required under applicable law for the sign in question, the sign was in all respects in compliance with the applicable laws in force at the time of the sign's installation.

Any sign, which is altered in any way, except for normal maintenance, shall be required to comply with these regulations.

(Ord. No. 99-5098, § 1, 8-9-99)

## SEC. 27-743. SIGNS PROHIBITED.

[The following signs are prohibited.]

(1) New billboards, off-premise/third party signs.

(2) Portable signs.

(3) Electronic message centers.

(4) Changeable copy signs, except for the use on a theater marquee.

(5) Rotating signs.

(6) Intermittent or flashing lights.

(7) Above peak roof signs unless a roof sign had previously been on the building.

(8) Streamers and pennants.

(Ord. No. 99-5098, § 1, 8-9-99)

## SEC. 27-744. TEMPORARY SIGNS.

(a) *Banner signs (public right-of-way).*

(1) Banners may be placed upon light standards to announce district wide events or exhibits at the Western Heritage Center.

(2) Banners may not exceed twenty (20) square feet in area.

(3) Fifteen (15) percent of the sign area may advertise the event sponsor.

(4) Banners may not be stretched across the public rights-of-way.

(b) *Banners (private property).*

(1) Each business shall be permitted to display one (1) banner not to exceed thirty-two (32) square feet in area for one (1) five-day period per calendar year.

(2) The banner may only advertise a product or service sold on the premises.

(c) *Sandwich board (A-frame) signs.*

(1) One sandwich board sign shall be permitted per public entrance.

(2) All requirements of Section 22-407.1 and 22-407.2 of the Billings Municipal City Code (BMCC) must be met.

(3) Sandwich boards must be securely anchored to the ground.

(4) Sandwich boards may only be displayed during regular business hours.

(Ord. No. 99-5098, § 1, 8-9-99) - (Ord. No. 4323, § 1(1.2), 11-24-80) (Ord. No. 4323, § 1(2), 11-24-80; Ord. No. 83-4537, § 1(8.2), 8-8-83; Ord. No. 89-4781, § 2, 2-27-89; Ord. No. 89-4801, § 1, 9-25-89; Ord. No. 90-4831, §§ 1, 2, 6-4-90; Ord. No. 91-4865, § 1, 3-11-91; Ord. No. 99-5107, § 1, 11-22-99) Cross references: Definitions and rules of construction generally, §§ 1-102, 27-103. (Ord. No. 4323, § 1(1.1), 11-24-80; Ord. No. 89-4781, § 1, 2-27-89)

## ARTICLE 27-800. SOUTH 27TH STREET CORRIDOR ZONING DISTRICT

### SEC. 27-801. INTENT.

The South 27th Street Corridor provides a major entrance from Interstate 90 into the Central Business District, major medical facilities, college campuses and Logan International Airport. This corridor is, very often, the first impression a visitor has when visiting the City of Billings.

The intent of the South 27th Street Corridor Zoning District is to promote attractive, high quality development within this corridor (see below Map 1) that will provide an appealing image of the City of Billings to the traveling public and community.

OBJECTIVES

A. To promote creativity in design, quality and character of new development;

B. To promote a unique, attractive water-conserving landscaped corridor;

C. To promote compatible land use transitions with high sensitivity towards existing and future residential uses;

D. To promote and assist in the orderly development of vacant land within the South 27th Street Corridor; and

E. To promote development patterns which are in harmony with the goals and objectives of the South Side Neighborhood Plan and the 1990 Yellowstone County Comprehensive Plan.[1]

[1] (Ord. No. 97-5048, § 6,12-22-97)

## ARTICLE 27-800. SOUTH 27TH STREET CORRIDOR ZONING DISTRICT

Map 1. South 27th Street Corridor Zoning District Boundaries

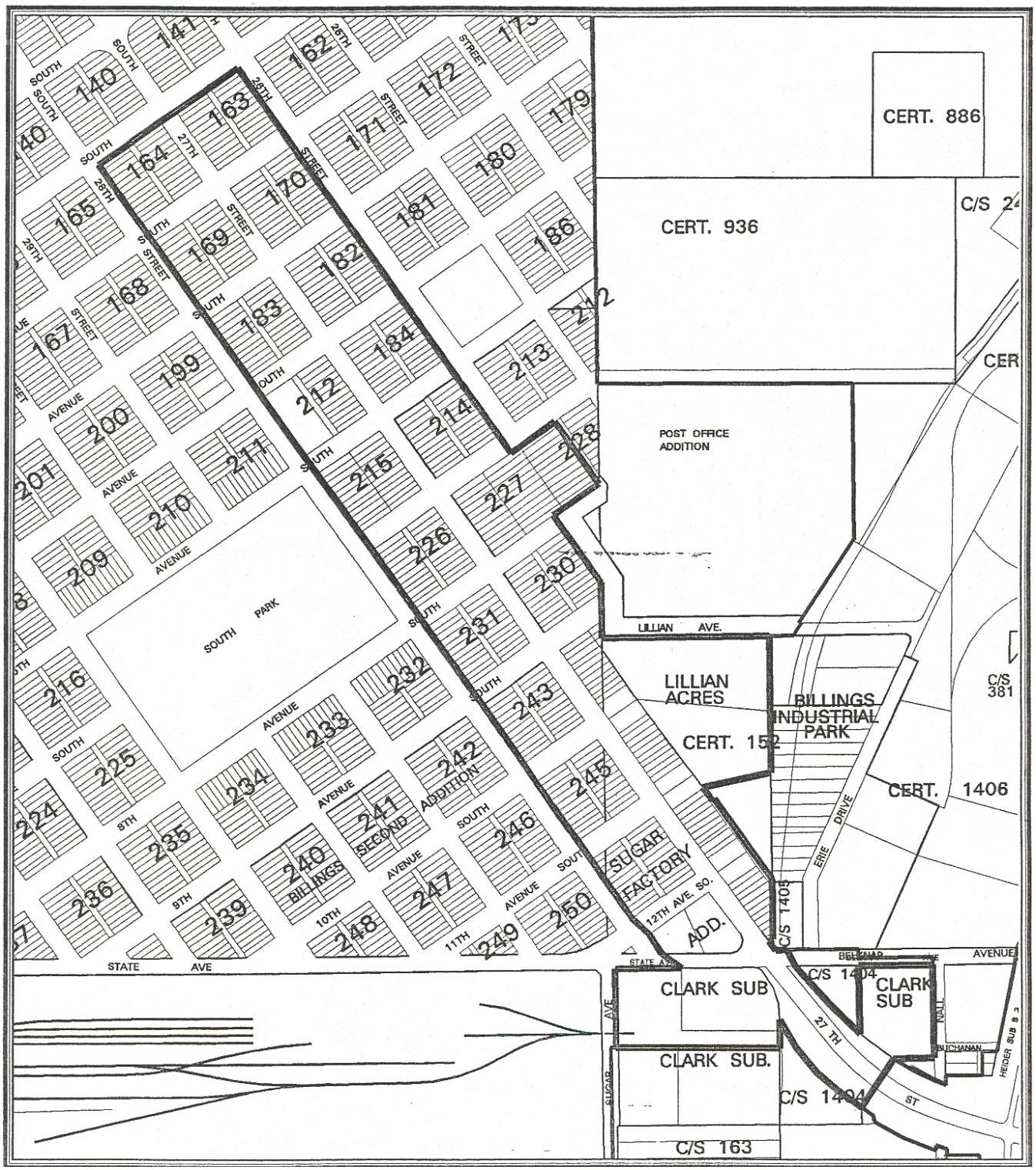

## SEC. 27-802. ADMINISTRATION.

Uses which are allowed by right or through Special Review approval in the South 27th Street Corridor Zoning District are listed in BMCC Section 27-306.

Upon submission of the building plans to the City of Billings Building Division, the Planning Department will review the submitted plans for conformance with the supplemental requirements as outlined in the following sections of this Chapter.

## SEC. 27-803. DEFINITIONS.

Terms not specifically defined in this section shall use the same meaning as defined in BMCC Section 27-201.

*Avenues:* Rights-of-way which run through or are located adjacent to the South 27th Street Corridor Zoning District, most of which run perpendicular to South 27th Street, such as 2nd Avenue South through 12th Avenue South. This term shall also include State, Lillian and Belknap Avenues.

## SEC. 27-804. SITE DEVELOPMENT.

Improvements (i.e. building standards, utilities, public facilities, drainage, parking, street access, etc.) not specifically addressed in this section, shall comply with all applicable ordinances of the Billings, Montana City Code (BMCC).

## SEC. 27-805. LANDSCAPING.

a. *Landscaping Along Street Frontage*. A minimum fifteen (15) foot wide landscaping strip is required along all streets and avenues between the exterior property line(s) and any parking lot development.

   There shall be five (5) canopy trees required per one hundred (100) feet of street frontage. The placement of these required trees within the required street/avenue bufferyard and the actual landscaping design shall be at the discretion of the developer, as approved by the Planning Department.

b. *Minimum Landscaping Requirements*. All areas not developed with either approved parking lot material or structures shall be landscaped. Appropriate landscaping material shall include turf, shrubs, trees, flower beds, vines or other live plant cover and shall make up at least ninety (90) percent of the required landscaping. No more than ten (10) percent of the landscaped area shall contain fountains, rock, bark chips, stepping stones or similar inorganic material.

A minimum of twenty (20) percent of the total lot area shall be landscaped with appropriate landscaping material.

All commercial uses abutting residential uses, including those located across an alley, shall install (in addition to the required twenty (20) percent landscaping) a fifteen (15) foot landscaped bufferyard between the commercial development property line and the residential property line. The landscaped strip shall contain a minimum of ten (10) canopy or evergreen trees per one hundred (100) lineal feet. The bufferyard shall also include a sight obscuring fence or wall that is architecturally compatible in color and design, with the commercial building. The fence or wall shall be a minimum of six (6) feet in height. Chain link or other wire fencing material is prohibited.

c. *Tree Conservation.* All existing mature/healthy trees, located within the landscaping setback requirements, shall not be destroyed and will be incorporated into the landscaping requirements, wherever possible.

d. *Supplemental Landscaping Standards.* All landscaped areas shall be irrigated and maintained. The responsibility for the maintenance of the landscaping shall lie with the property owner(s), his/her successor(s) and/or their agent(s). All landscaping elements shall be permanently maintained in good growing condition and kept free of weeds, debris and litter, and whenever necessary, replaced with new plant materials to ensure continued compliance with this section. In addition, all walls and fences shall also be maintained in good condition and, when necessary, be repaired or replaced.

Bufferyard depth is measured from the property line inward. Any buffer area which overlaps another buffer area shall be subtracted from the total to avoid double counting.

All landscaped areas must comply with the clear vision standards for intersections and driveways as established in BMCC Section 27-615. This section regulates the allowed height and placement of fences, walls, signs, landscaping materials, in addition to other objects located within the Clear Vision Triangle(s).

Landscaped areas within parking lots or the along perimeter of the property must be protected from vehicular traffic through the use of continuous concrete curbs, extruded asphalt or other approved permanent barriers.

It is recommended that the developer work with the City Parks Department, a local greenhouse operator, landscape architect or other qualified professional to determine the species of trees that are suitable for each situation. The use of native, drought-tolerant plant material is strongly encouraged. The planting of the trees should be done in such a manner as to provide maximum solar efficiency throughout the site.

A list of recommended plants can be obtained from the Planning Department.

## SEC. 27-806. SITE LIGHTING.

All exterior lighting shall be installed in such a manner that the light source will be sufficiently obscured to prevent excessive glare on public streets, walkways or onto adjacent property.

The exterior lighting shall be designed, located and mounted at heights no greater than:

1. Twelve (12) feet above grade for noncutoff lights; or
2. Thirty (30) feet above grade for cutoff or semi-cutoff lights.

Exterior lighting adjacent to residential uses shall be directed away from the residential use and public streets.

All exterior lighting shall be designed and located so that the maximum illumination measured in footcandles at the property line shall not exceed three-tenths (0.3) footcandle for non-directional lights and one and five-tenths (1.5) footcandles for directional lights.

## SEC. 27-807. STREET ACCESS.

Property with access onto South 27th Street or South 28th Street will be allowed one (1) drive approach per three hundred (300) feet of frontage or one (1) drive approach per development not to exceed three (3) drive approaches per block. The use of reciprocal approaches is encouraged.

Property with access onto South 26th Street and Avenues, will be allowed one (1) drive approach per one hundred forty (140) feet of frontage or one (1) drive approach per development not to exceed four (4) drive approaches per block.

Access is encouraged onto the Avenues whenever possible in order to limit curb cuts on South 27th Street and South 28th Street. In addition, access shall be determined by standards found in the Billings, Montana City Code or in County regulations, whichever is applicable.

Access onto South 27th Street shall be approved by the Montana Department of Transportation.

## SEC. 27-808. OUTSIDE STORAGE.

In order to maintain the visual integrity of the South 27th Street Corridor, any use requiring outside storage of material, equipment or business related supplies must obtain approval through the Special Review process as detailed in BMCC Section 27-1503 or 27-1509.

Solid waste storage facilities shall be located within an area enclosed with a sight obscuring fence or wall that is architecturally compatible in color and design with the building. Chain link or other type of wire fencing is prohibited. The City of Billings Public Works Department shall approve the solid waste storage facility for minimum

opening, accessibility, and other criteria deemed necessary for the removal of solid waste from the site.

### SEC. 27-809. BUILDING DESIGN.

All buildings shall be completed on all sides with an acceptable finishing material. The following materials shall be considered acceptable: brick, fluted block, colored textured block, glass, stucco, architectural concealed fastener metal panels, exterior insulation and finishing systems (i.e. Dryvit, etc.), stone or wood. Exposed seam metal buildings shall be prohibited unless covered with an acceptable material.

Roofs shall be finished with material that is architecturally compatible in color and design with the construction of the building. Metal roofs, fascia and mansards shall be limited to the following: standing seam, metal shakes or shingles and architectural metal treatments. All mechanical equipment placed on top of any roof shall be screened by a parapet or other similar architectural apparatus being at least the height of the mechanical equipment. Pitched roofs or other architectural facades are encouraged whenever possible.

### SEC. 27-810. SETBACK REQUIREMENTS.

All setbacks shall be measured from the appropriate property line.

Parking lots shall be setback a minimum of fifteen (15) feet from any street(s) and/or avenue(s) property line(s).

Minimum setbacks for all structures are as follows:

| | |
|---|---|
| Front | 20 feet |
| Side adjacent to street | 15 feet |
| Side | 10 feet |
| Side adjacent to residential use | 15 feet |
| Rear with alley | 0 feet |
| Rear without alley | 20 feet |

Arterial Setbacks as required in BMCC Section 27-602 shall be applicable for all structures and required parking, if greater than above setbacks.

### SEC. 27-811. BUILDING HEIGHT.

The maximum height for all buildings shall not exceed forty-five (45) feet.

**SEC. 27-812. RESERVED**

Editor's note—Ord. No. 99-5082, § 3, adopted February 8. 1999, repealed former section27-812 in its entirety which pertained to signs in the South 27th Street corridor and derived from Ord. No. 97-5048, § 6, adopted December 22, 1997.

## ARTICLE 27-900. MEDICAL CORRIDOR PERMIT ZONING DISTRICT

### SEC. 27-901. TITLE.

This chapter shall be known, cited and referred to as the "Medical Corridor Permit Zoning District Regulations."

### SEC. 27-902. PURPOSE.

The purpose of this chapter is to promote the most compatible, rational pattern of land uses in the medical corridor while establishing a core area in Billings which has a concentration of facilities offering medically-related services. To that end, a permit system has been developed to best accomplish this goal for a centralized area which is also designed for compatibility with neighboring, existing land uses.

### SEC. 27-903. CRITERIA GENERALLY.

In the medical corridor no specific land use is automatically allowed on a particular site as is the case under traditional zoning districts. Instead, a set of both absolute and relative criteria has been established which gives greater assurance that a centralized medical area can exist and be compatible with adjacent land uses, as well as, foster a healthy growth pattern in the medical corridor. Site and development plans are required to evaluate an applicant's success or failure to address these criteria. If the criteria are met, the land use may proceed. A developer must meet all the absolute criteria to qualify for a permit. In addition, in the relative criteria category, the developer must also attain a minimum of at least seventy (70) percent of the maximum points possible in order to proceed if the proposed development is medically-related and seventy-five (75) percent if it is not medically-related to quality for a permit. (See BMCC Section 27-912, "Land Use Relative Criterion" for definitions of land use). The requirements and procedures of this newly adopted district are contained in this part.

### SEC. 27-904. OFFICIAL ZONING MAP.

In order for the changes in zoning within this district to become effective, they must be entered on the official zoning map which is located in the office of the Yellowstone County Board of Planning. Such map shall be the final authority as to the current zoning status of land inside the city.

### SEC. 27-905. BOUNDARIES.

The boundaries of the Medical Corridor Permit Zoning District are described as follows:

> The area in the city which is inside the boundaries described, beginning with the point of intersection of center lines of 7th Avenue North and North 27th Street; thence in a northwesterly direction along the centerline of North 27th Street to the intersection of North 27th Street and Poly Drive; thence westerly along the centerline of Poly Drive to

the intersection of Poly Drive and North Broadway; thence southeasterly along the centerline of North Broadway to the intersection of North Broadway and the northern border of Lot 15, Block 2, Normal Subdivision; thence southwesterly along the northern border of Lot 15 to the alley; thence in a northwesterly direction along the centerline of the alley to Poly Drive; thence westerly along the centerline of Poly Drive to the intersection of Poly Drive and North 29th Street; thence southeasterly along the centerline of North 29th Street to the intersection of North 29th Street and Elevation Avenue; thence southwesterly along the centerline of Elevation Avenue to the intersection of Elevation Avenue and Grandview Boulevard; thence westerly along the centerline of Grandview Boulevard; to the intersection of Grandview Boulevard and Locust Street; thence southerly along the centerline of Locust Street to the intersection of Locust Street and the vacated portion of Elevation Avenue (Resolution 83-14404 vacated Elevation Street between North 30th and North 31st Streets on September 26, 1983); thence northeasterly along the centerline of the vacated portion of Elevation Avenue to the intersection of vacated Elevation Avenue and the alley between North 31st Street and North 30th Street; thence southeasterly along the centerline of the alley to the intersection of the alley and 7th Avenue North; thence northeasterly along the centerline of 7th Avenue North; to the intersection of 7th Avenue North and North 27th Street, which is the point of beginning.

## ARTICLE 27-900. MEDICAL CORRIDOR PERMIT ZONING DISTRICT

### MAP 1. MEDICAL CORRIDOR PERMIT ZONING DISTRICT

## SEC. 27-906. MEDICAL CORRIDOR PERMIT ZONING SYSTEM PROCESS.

(a) The permit zoning system process is a review of development proposals against a set of absolute and relative criteria. Permit zoning allows those land uses that can meet the criteria pertinent to a specific site.

(b) Every land use must satisfy the criteria listed in the "all development" category, as well as, any other applicable criteria from the "special requirements" categories. The specific criteria which a proposal must satisfy are dependent upon the type of land use being proposed.

(c) The absolute criteria must be satisfied before approval can be granted. These include assuming compatibility and compliance with adopted official plans, minimum engineering and public service requirements and environmental standards as outlined in this document. Each of the applicable absolute criteria must be answered yes before approval can be granted.

(d) Relative criteria are the "points" of the system. Each development must achieve a specified minimum percentage of these criteria. A score above the minimum percentage may be used to receive extra points. The absolute criteria are designed to address public service requirements and reduce negative impact of development, while the relative criteria focus on the actual design of a project including but not limited to: building layout, open space, landscaping, pedestrian circulation, and architectural design. The design of a site plan is thus evaluated against the relative criteria and scored on a point chart.

(e) The performance of a particular development plan shall be evaluated as follows:

1. *Absolute Criteria.* Each of the absolute criteria is answered yes, no, or not applicable. A "no" answer to any applicable absolute criteria will automatically exclude the plan, as proposed, from further consideration. Modifications to correct any problems would have to be made before further consideration could be given to the development proposal.

2. *Relative Criteria.* The development plan is evaluated against each applicable relative criterion and assigned a "score." The numerical score is assigned based on the following:

| | | |
|---|---|---|
| 2 | = | For an excellent job of implementing the criteria or for doing the best job possible, given the constraints and opportunities of the site. |
| 1 | = | For an adequate job of implementing the criterion. |
| 0 | = | For no effort or failure to implement the criterion. |

Each relative criterion has been pre-assigned a "multiplier" which determines the relative importance of that criterion to the other criteria. The meaning of each multiplier is as follows:

3 = Very important

2 = Average importance

1 = Minor importance

The points earned for each criterion are the product of multiplying the "score" times the "multiplier." The maximum points possible in each category are added together, as are the total points earned by the proposal. The points the proposal has earned must equal at least seventy (70) percent of the maximum points possible in order to proceed if the proposed development is medically-related and seventy-five (75) percent if it is not medically-related. The objective is to receive the maximum number of points.

## SEC. 27-907. SPECIAL REQUIREMENTS.

The following special requirements shall apply to any area development.

1. *Residential Developments.* The maximum density permitted shall not be allowed as a matter of right, and the actual density shall be as determined by the final plan and approved in accordance with the permit zoning process. A score of seventy-five (75) percent or more must be achieved among the relative criteria for a proposal which is not medically-related to proceed.
2. The city shall have the right to establish general design standards, guidelines, and policies, for the purpose of implementing and interpreting the permit zoning.

## SEC. 27-908. PROCEDURES.

(a) *Conceptual Review.* This is an opportunity for applicants to discuss requirements, standards, and policies that apply to development proposals. Major problems can be identified and solved before a formal application is made. The applicant must arrange a conceptual review meeting with the Zoning Coordinator or his/her designee. Representatives of the Building, Engineering, Parks and Recreation, Community Services, City-County Health, Public Works Administration, Public Utilities, Fire, Traffic and Planning Departments will be sent notification of the conceptual review meeting along with copies of building and/or site plans. Should it be necessary, department representation may be reviewed and changed, subject to the City Administrator's directive. Representatives from the departments will decide at the conceptual review whether any of the absolute or relative criteria are not applicable for the application in question and whether their department needs to participate at the preliminary and final review stages.

The general outline of the proposal, evidenced schematically by sketch plans, shall be submitted by the applicant and reviewed by the Zoning Coordinator. Following the review the Zoning Coordinator shall furnish the applicant with written comments regarding the application, including appropriate recommendations to inform and assist the applicant prior to preparing the formal application.

The applicant shall allow two (2) weeks from the conceptual review meeting for written staff evaluation of the conceptual review and the recommendation(s) of the Zoning Coordinator.

(b) *Preliminary Plans.* An application for preliminary review may be filed with the Zoning Coordinator upon completion of the conceptual review meeting and after the recommendation of the Zoning Coordinator has been made. If the Zoning Coordinator has not made written comments within the required two (2) weeks after the conceptual review, then the applicant may submit a preliminary plan at any time thereafter. It is at this point that the applicant addresses the pertinent absolute and relative criteria. A review meeting is held between the applicant, Zoning Coordinator, and other departments and agencies. Adjacent property owners (including the property owners adjacent to, in the rear of and to either side, and directly across the street from and to either side of the proposal site) will be invited to attend and participate in the meeting. Adjacent property owners will be notified by the Zoning Coordinator by letter which includes a brief explanation of what the developer proposes to build so those persons have an opportunity to review and comment on the proposal and to attend the preliminary plan review meeting. The preliminary plan review meeting will be held within thirty days (30) days of the submittal unless the developer agrees to an extension.

Two (2) weeks from the review meeting date are allowed for the written evaluation of the preliminary plan by the appropriate departments/agencies having responsibility for review of such proposals, as determined by the Zoning Coordinator.

If approval is granted following the review, then preliminary approval will be valid for one hundred eighty (180) days.

Applications requiring a major subdivision, abandonment of rights-of-way or other items requiring City Council action by ordinance will be subject to City Council approval before the final plan approval can be granted.

If no revisions are required of the preliminary plan, then the plan shall be automatically considered as the final plan and the final plan review meeting will be waived.

(c) *Final Plans.* The submittal of the final plan follows within one hundred eighty (180) days of the granting of the preliminary plan, and it will be in substantial compliance with the approved preliminary plan. The submitted final plan will not:

1. Change the use or character of the development; or
2. Cause changes in the development that will reduce the total points earned by more than five (5) percent or to a point below the minimum point total required for the proposed development.

A final plan review meeting will be held within thirty (30) days of the final plan submittal, between the applicant, Zoning Coordinator, as well as, other departments and agencies. Adjacent property owners will again be invited to attend and participate in the meeting. As with the preliminary plan review, the Zoning Coordinator shall notify adjacent property owners by letter of the final plan submittal, inviting their comments prior to and at the meeting. The Zoning Coordinator will

distribute plans to the departments and agencies which participated in the conceptual and preliminary reviews for their evaluation. The applicant shall allow thirty (30) days from the date of submittal for receipt of the written staff evaluation of the final plan review.

Applicant and adjacent property owners dissatisfied with the decision of the Zoning Coordinator shall have the process of appeal to the City Council, as outlined below in Section 27-916.

## SEC. 27-909. CONTENT OF DEVELOPMENT SUBMITTAL.

(a) Applications for site and building permit review are not required for the conceptual review, as this stage of the process is intended to allow the developer to meet informally with the Zoning Coordinator and other appropriate staff to determine if the proposal is worth pursuing before he/she has incurred any substantial expense. The conceptual review stage is also provided so that a developer can obtain initial feedback from the Zoning Coordinator as to what he/she and other departments may want to include in the preliminary and final plans.

(b) For the preliminary and final review process, copies of the site plan and complete building and supporting data, as determined necessary, shall be submitted to the Zoning Coordinator, along with the application fee which shall be set by the City Administrator. In this regard, the following will be required:

1. A legal and general description of the tracts upon which review is sought.
2. Names and addresses of owners of real property adjacent to the project site plus legal descriptions of the adjacent properties.
3. Statement of proposed use.
4. A site plan at a suitable scale (no greater than 1" = 4' or no less than 1" = 50'), and indicating:
    a. Suggested plans for proposed storm water drainage system sufficient to drain and dispose of all surface water accumulation within the area, indication of sanitary sewer, water, gas, electric, etc., easements, and written notifications that they have been reviewed by the City Engineer and Public Utilities Department for feasibility purposes;
    b. Landscape plans including species, size and spacing of trees and shrubs;
    c. Locations of all existing and proposed buildings, recreation areas, utility and service areas, fire hydrants, access drives, full width of street and adjacent drives, parking areas, storage areas, existing and proposed utility lines, and easements;
    d. Location and description of all other existing and proposed site improvements including fences, walls, signs, lighting, walkways, patios, decks, and barriers;

e. A clear delineation of all areas to be paved or surfaced, including a description of surfacing material to be used;

f. The planned use of all yards;

g. Location and description of all off-site improvements and right-of-way dedication; and

h. Payment of application fees.

5. Building plans for all structures including:

a. The size, alignment and intended use of all structures;

b. Architectural plans for proposed buildings complete with exterior finishes and including floor plans and elevations; and

c. These plans shall also indicate unit sizes, ratios of dwelling unit to total lot sizes and parking spaces.

6. A timetable for the proposed construction project.

7. Any other information pertinent to the particular project which, in the opinion of the Zoning Coordinator and/or city staff, is determined to be necessary for the review of the project (i.e., traffic accessibility study).

## SEC. 27-910. REVIEW PROCEDURES.

The following review procedures have been established to assure that the process as outlined in this document is handled in a smooth and timely manner for a developer in the medical corridor and to protect the interests of adjacent property owners.

1. It will be the responsibility of the Zoning Coordinator to process permit requests under this system in the following manner:

a. A developer will bring his/her request for a permit to the Planning Department.

b. The Zoning Coordinator shall determine the time and place of the conceptual plan review with the developer. A formal application and payment of any required fees under this system is not required at this time.

c. The Zoning Coordinator shall notify all departments and/or agencies regarding the conceptual review meeting. Those parties will determine whether their attendance is necessary at the future meetings.

d. Following the conceptual review the applicant shall pay required fees and prepare a formal application at the time of preliminary plan submittal.

e. The Zoning Coordinator shall distribute copies of building and site plans submitted at the preliminary plan review stage and the final plan

stage to all departments and/or agencies who have participated in the conceptual review.

f. The Zoning Coordinator shall notify adjacent property owners, by certified letter, of the development proposal and afford them the opportunity to review the preliminary plan after submission to the Zoning Coordinator. Staff will have thirty (30) days to review the preliminary plan and adjacent property owners are encouraged to give their comments during this period prior to the preliminary plan review meeting so that the developer can be made aware of any major differences or concerns on the part of any adjacent property owners to the development proposal. Feedback during this period will also minimize any major problems for the developer and the city prior to approval of the final plan. If necessary, the Zoning Coordinator can arrange a separate meeting between the developer and adjacent property owners to resolve differences. Adjacent property owners will be invited to attend the preliminary plan review meeting.

g. Following the preliminary plan review meeting the Zoning Coordinator shall again notify adjacent property owners as outlined in this document, by letter, of the time and place of the final plan review meeting to afford them another opportunity to comment on the proposal.

Should either the developer and/or adjacent property owner be dissatisfied with the final decision, either party has the right to appeal the decision directly to the City Council as outlined in BMCC Section 27-916 of this document.

2. The review may result in disapproval, approval, or approval with certain conditions of the proposed development. Approval of the preliminary plan does not constitute final approval, but rather indicates an expression of intent. The issuance of the building permit itself constitutes final approval.

3. Activities authorized by granting of the building permit shall be initiated within six (6) months and completed within twelve (12) months after issuance of the permit, or within the approved time schedule submitted and approved for larger projects. The Building Official has the ability to grant a six (6) month extension under this system. Time schedules are included to assure the timely development of the area. Should the time period expire and an extension is not granted, the developer shall file a new application which will require resubmission of building and site plans and payment of fees as in the original application, as outlined in BMCC Section 27-909 of this document.

## SEC. 27-911. POINT CHART FOR ALL DEVELOPMENT - ABSOLUTE CRITERION

(To be completed by Zoning Coordinator and city staff)

| ABSOLUTE CRITERION | Is the Criterion Applicable? | | Is the Criterion Complied with? | |
|---|---|---|---|---|
| | Yes | No | Yes | No |
| Building Standards | | | | |
| Utilities | | | | |
| Vehicular Traffic | | | | |
| Pedestrian Access | | | | |
| Public Facilities | | | | |
| Public Right-of-Way | | | | |
| Lighting | | | | |
| Drainage | | | | |
| Signage | | | | |
| Noise | | | | |
| Parking | | | | |

A proposal must receive a "yes" answer to all applicable criteria in order to qualify for approval.

**Building Standards**:

Does all construction conform to the adopted building and site development codes?

All structures to be constructed in the medical corridor shall require site approval by the Planning and Engineering Departments and building plan approval by the Building Official before a building permit can be issued. Any structure will also require Fire Department approval of the structure's fire design.

Developer:

_____

_____

_____

Building Official:

(building plan)

_____

_____

_____

Criterion complied with: Yes_____ No_____

Planning:

(site plan)

_____

_____

_____

Criterion complied with: Yes_____ No_____

Fire Department:

(fire design)

_____

_____

_____

Criterion Complied with: Yes _____ No_____

Standards:

Billings, Montana City Code, Chapter 6, "Buildings and Building Regulations": All sections except Section 6-1100.

**Utilities:**

Is the proposed development served by city services (water, sanitary and storm sewer) with adequate capacity or have arrangements been made for extension and augmentation?

Developer:

_____

_____

_____

Public Utilities:

_____

_____

_____

Criterion complied with: Yes_____ No_____

Public Works:

_____

_____

_____

Criterion complied with: Yes_____ No_____

Fire Department:

_____

_____

_____

Criterion complied with: Yes_____ No_____

Standards:

No definite answer exists for the amount of new development which could be sustained in the medical corridor area because it depends upon the type of development proposed. Assessing the capacity of existing sewer and water lines is very difficult on a small scale basis due to a number of variables.

Large multiple family, commercial, and institutional complexes or projects would require increased capacity in order to meet the sanitation, water and fire protection needs. Property owners and developers of such complexes will be required to comply with the Public Utilities Department policy regarding fire suppression water facilities, stating that:

It is the Public Utilities Department's policy to require property annexed to the City of Billings and property rezoned or redeveloped within the corporate city limits to upgrade water lines and appurtenances and to install the proper number of fire hydrants, if necessary, in order to provide the required fire suppression water for the city's fire

department. Such facilities shall be constructed by public works contractors either by special improvement district methods or by private contract and the cost of such construction will be directly assessed to the properties benefited from the construction of said facilities.

Property owners and developers will have to include the cost of upgrading the water and sanitary sewer mains and appurtenances and installing the proper number of fire hydrants within their expected cost of development. Since the utility systems rely on system components outside the immediate development area for proper functioning, upgrading may involve more than just those facilities in the specific development site area. Any designs for the upgrading of water mains, appurtenances, and fire hydrants must have plans and specifications stamped by a Montana Registered professional engineer. Any such plans and specifications must be approved by the Public Utilities Department and the State Department of Environmental Quality.

The Billings Fire Department will determine the required fire suppression water flow.

**Vehicular Traffic:**

What will be the impacts of the traffic generated by the proposed development project, and how does the developer propose to mitigate these impacts?

In assessing these impacts the developer should be as specific as possible in addressing the present and future capacity of the street system so that the city traffic engineer can evaluate the proposed development.

Developer:

_____

_____

_____

City Traffic Engineer:

_____

_____

_____

Criterion complied with: Yes _____ No_____

Standards:

If development generates more than five hundred (500) vehicle trips a day, an accessibility study will be required. See BMCC Section 6-1208(d). Traffic accessibility studies will also be required if the proposal includes a drive-up window or special traffic characteristics:

BMCC Section 27-604: (Fences and Hedges); and

BMCC Section 27-615: (Visibility at Intersections).

See the report entitled "Traffic Accessibility Studies" available from the Traffic Engineering Division, if there are any questions regarding whether an accessibility study is required and what its contents should be.

**Pedestrian Access:**

Pedestrian access must be provided to every building in the proposed development. It may be achieved in two (2) ways: "Public," as normally required and specified in the engineering standards of the city, and/or "private," a system of pedestrian sidewalks and paths which provides to the satisfaction of the city equal or better performance than the "public" system. The developer is to assess the condition of the present city sidewalks.

Developer:

_____

_____

_____

City Engineer:

_____

_____

_____

Criterion complied with: Yes_____ No _____

Standards:

Billings, Montana City Code, Chapter 22, "Streets, Sidewalks and Other Public Places": Articles 22-200 and 22-400.

Public Works Department standards.

**Public Facilities:**

Does the project comply with all city design standards, requirements, and specifications for the following?

-Fire equipment accessibility
-Fire protection
-Street lighting
-Streets
-Utility services
-Clear vision
-Handicapped access (public and private)
-Traffic control devices
-Trash collection
-Walks
-Curb cuts
-Arterial setbacks

Developer:

_____

_____

_____

Fire Department:

_____

_____

_____

Criterion complied with: Yes_____ No_____

Planning:

_____

_____

_____

Criterion complied with: Yes_____ No_____

Public Utilities:

_____

_____

_____

Criterion complied with: Yes _____ No_____

Public Works:

_____

_____

_____

Criterion complied with: Yes _____ No_____

Building Official:

_____

_____

_____

Criterion complied with: Yes _____ No _____

Standards: Billings, Montana City Code:

Chapter 14, "Fire Prevention and Protection": All sections.

Chapter 6, "Buildings and Building Regulations": Section 6-300, Section 6-305 and Section 6-301.

Chapter 22, "Streets, Sidewalks, and Other Public Places": All sections.

Chapter 24, "Traffic and Motor Vehicles": Sections 24-100 and 24-400.

Chapter 21, "Solid Waste": All sections.

Chapter 26, "Water and Wastewater Utilities": All sections.

Chapter 27, "Zoning": Sections 27-602 and 27-615.

Public Works Department standards.

Public Utilities Department standards.

Building Division standards.

**Public Right-of-Way:**

Does the proposed project require either dedication of additional right-of-way or vacation of a public right-of-way (a right-of-way is a strip of land dedicated or acquired for use as a public way)?

Developer:

_____

_____

_____

Public Utilities:

_____

_____

_____

Criterion complied with: Yes _____ No _____

Public Works:

_____

_____

_____

Criterion complied with: Yes _____ No _____

Standards:

Billings, Montana City Code, Chapter 22, "Streets, Sidewalks and Other Public Places": Article 22-600.

Example. If an alley is vacated, any and all public utilities located therein will have to be relocated at the expense of the developer or owner as the city will not want public utilities such as sewer and water lines located within privately-owned land.

**Lighting:**

Is sufficient exterior lighting proposed and will it be installed so the light source sufficiently avoids spillover of light and glare on operators of motor vehicles, pedestrians, and land uses in the proximity of the light source? (This criterion does not include public street lighting which is regulated under the public facilities criterion.)

Developer:

_____

_____

_____

Public Works:

_____

_____

_____

Criterion complied with: Yes _____ No _____

Standards:

Definitions:

Candlepower: The amount of light that will illuminate a surface one foot distant from a light source to an intensity of one footcandle. Peak candlepower is the largest amount of candlepower emitted by any lamp, light source, or luminaire.

Cutoff: The point at which all light rays emitted by a lamp, light source, or luminaire are completely eliminated at a specific angle above the ground.

Cutoff angle: The angle formed by a line drawn from the direction of light rays at the light source and a line perpendicular to the ground from the light source, above which no light is emitted.

Cutoff-type luminaire: A luminaire with elements such as shields reflectors, or refractor panels which direct and cut off the light at a cutoff angle that is less than ninety (90) degrees.

Footcandle: A unit of illumination produced on a surface, all points of which are one (1) foot from a uniform point source of one candle.

Luminaire: A complete lighting unit consisting of a light source and all necessary mechanical, electrical, and decorative parts.

Maximum permitted illumination: The maximum illumination measured in footcandles at the interior bufferyard line at ground level in accordance with the following standards.

The maximum height of light posts is correlated to the amount of cutoff provided. Exterior lighting must meet one of these options:

A. When a light source or luminaire has no cutoff:

- Maximum permitted illumination - 0.30
- Maximum permitted height of luminaire - 20 feet

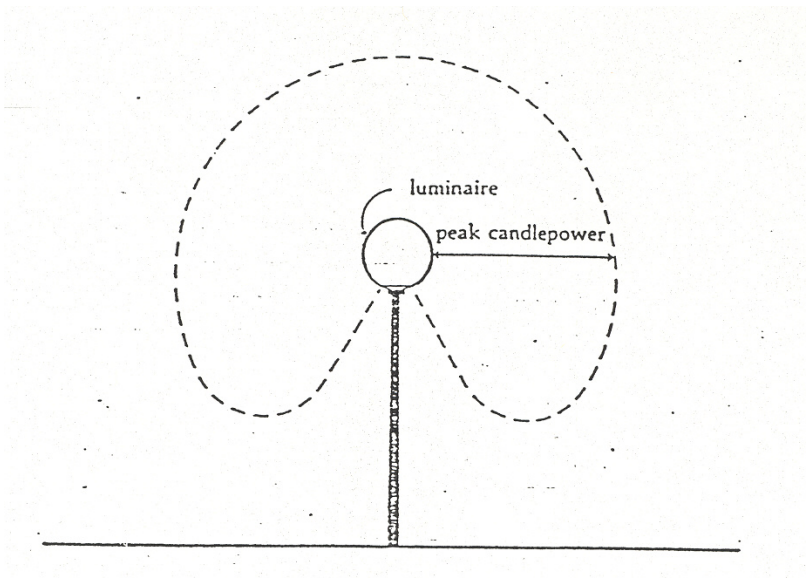


NO CUTOFF LUMINAIRE

B. When a luminaire has total cutoff of an angle equal to ninety (90) degrees, the maximum illumination and the maximum permitted luminaire height shall be:

Maximum permitted illumination - 1.0

Maximum permitted height of post - 30 feet

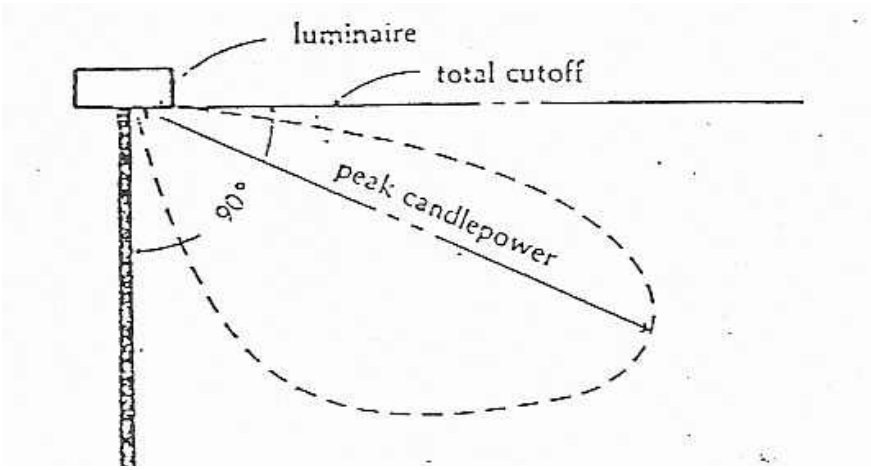


90° CUTOFF LUMINAIRE

C. When a luminaire has total cutoff of light at an angle less than ninety (90) degrees and is located so that the bare light bulb, lamp, or light source is completely shielded from the direct view of an observer five (5) feet above the ground at the point where the cutoff angle intersects the ground, then the maximum illumination and maximum permitted height of the luminaire shall be:

- Maximum permitted illumination - 3.0
- Maximum permitted height of post - 40 feet

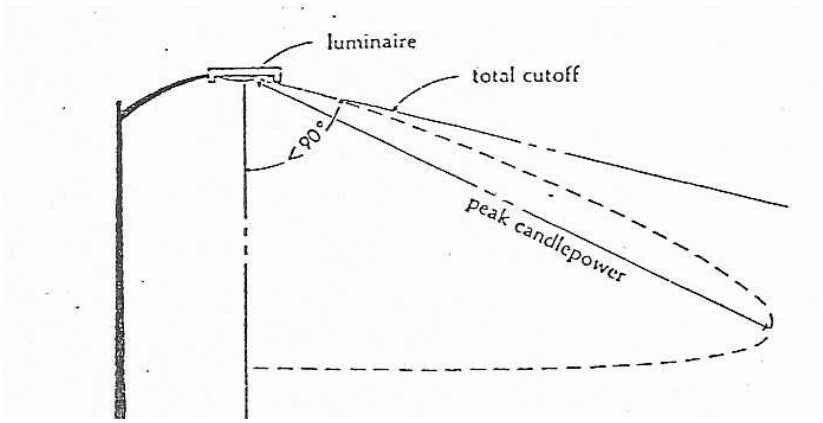


LUMINAIRE WITH LESS THAN 90° CUTOFF

No flickering or flashing lights are permitted.

Light sources or luminaires are not allowed within bufferyard areas, except on pedestrian walkways.

Billings, Montana City Code, Chapter 6, "Buildings and Building Regulations": Section 6-1203(q)(5) (Lighting of parking lots).

**Drainage:**

The project will have the proper drainage as per city standards.

Developer:

_____

_____

_____

City Engineer:

_____

_____

_____

Criterion complied with: Yes _____No_____

Standards:

Billings, Montana City Code: Chapter 6, "Buildings and Building Regulations", Articles 6-200 and 6-1200.

Public Works Department standards.

Ordinance No. 83-4565, Section 3.

**Signage:**

Signs will be constructed to conform with the Sign Code. Signs shall not be mounted on a roof. There shall be no signs in a clear vision area. No moving, flashing or blinking signs shall be allowed.

Developer:

_____

_____

_____

Sign Code Administrator:

_____

_____

---

Criterion complied with: Yes _____No_____

Standards:

Sign Code and all other applicable ordinances regulating signs.

**Noise:**

Projects will be designed to protect against noise pollution on the part of or happening to the project users.

Developer:

---

---

---

Building Official:

---

---

---

Criterion complied with: Yes _____No_____

Standards

Billings, Montana City Code, Sections 17-101 through 17-112, "Noise."

For purposes of this criterion, the applicable district corresponding with the medical corridor will be "residential." (See Section 17-101, definition of "residential area" and BMCC Section 17-104, Table I)

Examples of design methods to reduce external noise intrusion include insulation, double-glazed windows, solid core doors, and acoustical ceiling tiles.

**Parking:**

Projects shall meet or exceed the city standards for off-street parking and loading area requirements.

Developer:

---

---

---

Building Official:

_____

_____

_____

Criterion complied with: Yes _____ No _____

Standards: Billings, Montana City Code, Chapter 6, "Buildings and Building Regulations": Article 6-1200.

**SEC. 27-912. POINT CHART FOR ALL DEVELOPMENT - RELATIVE CRITERION.**
(To be completed by Zoning Coordinator and city staff)

| RELATIVE CRITERION | Is the Criterion Applicable? Yes | No | Awarded Score | Multiplier | Points Earned | Maximum Points |
|---|---|---|---|---|---|---|
| Building Scale | | | | 3 | | 6 |
| Landscaping | | | | 3 | | 6 |
| Parking | | | | 3 | | 6 |
| Land Use | | | | 3 | | 6 |
| Density | | | | 3 | | 6 |
| Compatibility | | | | 3 | | 6 |
| Access on North 27th St. | | | | 2 | | 4 |
| Architectural Design | | | | 2 | | 4 |
| Building Materials | | | | 2 | | 4 |
| Removal of Dwellings | | | | 1 | | 2 |
| Residential Multi-Family | | | | 1 | | 2 |
| Transit | | | | 1 | | 2 |
| Multiple-Use | | | | 1 | | 2 |
| Pollution | | | | 1 | | 2 |
| TOTAL | | | | | | 58 |

Note: All medically-related proposals must achieve a minimum score of seventy (70) percent of the applicable criterion points possible in the relative criteria rating before a project can be approved, in addition to receiving "yes" answers to all applicable absolute criteria. If the land use proposal is not medically-related, then the proposal must achieve seventy-five (75) percent of the total points possible plus a "yes" answer to all applicable absolute criteria. Thus if all the relative criteria are applicable, a project must score forty (41) points (seventy (70) percent) or forty-four (44) points (seventy-five (75) percent), depending on its land use.

**Building Scale:**

The scale of a building (its height, bulk, setback, and lot coverage) is encouraged to be sensitive to the immediate environment and, when possible, compatible in appearance with the scale of neighboring buildings. Property located between North 30th Street and the alley toward North 31st Street must maintain at least a ten (10) foot minimum setback from the alley. Where access is a problem for fire equipment, the Fire Department will require built-in fire protection systems.

Developer:

_____

_____

_____

Requested Score _____

Planning:

_____

_____

_____

Recommended Score _____

Multiplier x3 _____

Total Points _____

Final Plan Review:

_____

_____

_____

Awarded Score _____

Multiplier x3 _____

Total Points _____

Standards and Scoring:

For arterial setbacks see Chapter 27, "Zoning": Section 27-602.

See BMCC Sections 27-308 and 27-309 for general requirements for the Residential Multi-Family - Restricted, Residential Professional, Community Commercial, and Central Business Districts and BMCC Section 27-310 for Supplemental Area, Yard and Height Restrictions.

| Points | Scale of Project |
|---|---|
| 2 | Fifty (50) percent or less lot coverage; same maximum height and minimum yard requirements as Residential Professional zoning classification for commercial uses and Residential Multi-Family Restricted for multiple family dwellings. |
| 1 | Standards for Community Commercial zoning classification met. |
| 0 | Standards for Central Business District zoning classification met. |

**Landscaping:**

A project is encouraged to be landscaped in such a way as to provide public open space and areas of pedestrian activity and create an aesthetically pleasing setting around buildings and parking lots, and to create buffers between the proposed development and potentially incompatible uses (e.g., between parking lots and residential area).

Developer:

_____

_____

_____

Requested Score_____

Planning:

_____

_____

_____

Recommended Score _____

Multiplier x3 _____

Total Points _____

Final Plan Review:

_____

_____

_____

Awarded Score _____

Multiplier x3 _____

Total Points _____

Standards and Scoring:

Existing, healthy plant material may be counted for contributing toward the total plant material required. All plantings in right-of-way are subject to review and approval by the Parks Department and may be counted for up to twenty-five (25) percent required landscaping area.

Adequate maintenance must be included in the proposal to assure upkeep of all plant materials and landscaping treatments.

Appropriate plant materials are set forth in Section 27-913 and the "Plant Materials" reference document.

Understory trees may be substituted for canopy trees where it is found that canopy trees would destroy solar access on adjacent properties.

User safety is to be considered when selecting plant materials for landscaping areas heavily used at night.

The standards are applied proportionately when the total linear feet of building perimeter is over three hundred (300) feet for non-residential uses or ten (10) residential dwelling units.

Number of plant units required per three hundred (300) square feet of nonresidential use or ten (10) dwelling units:

2 Canopy;

2 Understory;

10 Shrubs.

The number and type of plant units suggested per twenty-four (24) automobile spaces in an off-street parking area is shown below. The standards shall be applied proportionally to any number of spaces over twenty-four (24).

Minimum area within which recommended planting should be provided - three hundred sixty (360) square feet:

2 Canopy;

1 Understory;

4 Shrubs.

360 S.F./24 Stalls

2 Canopy

1 Understory

4 Shrubs

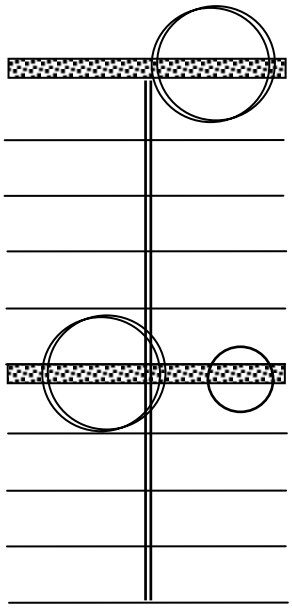

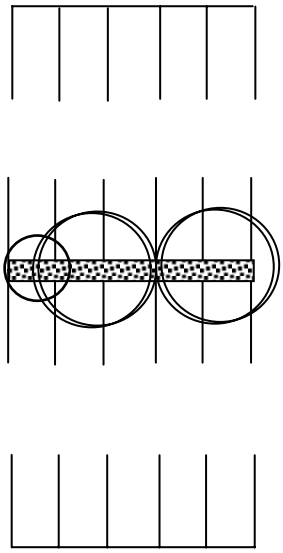

Examples

| Points | Plant Material |
|---|---|
| 2 | Greater than 100% of standard. |
| 1 | Meets 100% of standard. |
| 0 | Meets less than 100% of standard or no effort made. |

Note: Lot area set aside for green areas and landscaping are not to include concrete, asphalt, cement, or gravel treatments. However, consideration to point adjustment will be given based on quality (e.g. benches, lawn areas, usable space, pedestrian plazas, and plantings).

**Parking:** Parking garage construction or joint use agreements are encouraged in order to reduce the amount of land being used for parking.

Developer:

_____

_____

_____

Requested Score_____

Building Official:

_____

_____

_____

Recommended Score _____

Multiplier x3 _____

Total Points _____

Final Plan Review:

_____

_____

_____

Awarded Score _____

Multiplier x3 _____

Total Points _____

Standards and Scoring:

Billings, Montana City Code, Chapter 6, "Buildings and Building Regulations": Article 6-1200.

Maintain parking according to building code occupancy for employees (one space per employee). In addition to this, meet "Table of Minimum Standards-Off-Street Parking" (BMCC Section 6-1203(j)) according to proposed land use.

| Points | Parking Requirement |
|---|---|
| 2 | Provide 20% over minimum parking standard plus joint use agreements for at least 25% of the parking provided, or a parking garage for at least the minimum parking standard. |
| 1 | Provide 10%-20% over minimum parking standard, or provide minimum standard plus a plan to promote mass transit or carpooling (as approved by MET). |
| 0 | Less than 10% over the minimum standard met for parking. |

**Land Use:** The land use of the development is encouraged to be medically-related, given that the primary reason for establishing the medical corridor is to provide for a systematic development of medical services in this area and to have its development be consistent with high quality standards.

Developer:

_____

_____

_____

Requested Score _____

Planning:

_____

_____

_____

Recommended Score _____

Multiplier x3 _____

Total Points _____

Final Plan Review:

_____

_____

_____

Awarded Score _____

Multiplier x3 _____

Total Points _____

Standards and Scoring:

Set forth below are general and specific land use definitions.

Generally:

| Points | Land Use |
|---|---|
| 2 | Offices for physicians and surgeons, dentists and dental surgeons, osteopathic physicians, or chiropractors; hospitals and clinics; medical laboratories; dental laboratories; convalescent homes; health and allied services. |
| 1 | Medical support services, accessory uses. |
| 0 | All other land uses. |

Specific land use definitions:

Point Value - 2

Offices of physicians and surgeons:

Clinics (operated by physician groups)

Gynecologists

Neurologists

Nuclear medicine and radio-therapists

Obstetrics

Oculists

Offices of physicians and surgeons

Opthamologists

Pathologists

Psychiatrists

Psychoanalysts

Radiologists

Offices of dentists and dental surgeons

Offices of osteopathic physicians

Offices of chiropractors

Hospitals:

Hospitals for humans

Hospital-operated clinics

Nurses' training schools

Medical laboratories:

Laboratories (not manufacturing) for biological, bacteriological, chemist, medical, x-ray (picture and treatment)

Pathological laboratories

Research laboratories (medically-related)

Dental laboratories

Denturists

Convalescent homes:

Convalescent homes

Nursing homes

Rest homes

Health and allied services:

Birth control clinics

Blood banks

Clinics, not operated by hospitals or physician groups
Dieticians and diet centers
Group health associations
Medical photography
Mental health centers
Nursing services
Occupational therapeutist
Optometrists
Out-patient treatment clinics for alcoholism and drug abuse
Physiotherapy
Psychiatric clinics
Podiatrists
Prosthesists
Orthopedic Supply
Audiologists
Psychotherapists
Rehabilitation centers (therapy and treatment)
Speech defect clinics

Point Value - 1

Medical support services:

Day care centers
Group homes
Medically-related office space
Medical educational facilities
Out-patient medical and surgical support services
Pharmacies

Accessory uses and uses incidental to any of the above uses:

Cafeteria
Churches, chapels, houses of worship
Heliport (no bulk-fuel storage will be allowed)
Hotels, motels
Mortuaries
Off-street parking garages and lots

Recreational facilities

Restaurant (without beer/wine or all beverage liquor license)

Restaurant (affiliated with hotel or motel, without beer/wine or all beverage liquor license)

Point Value - 0

All other land uses.

**Density:** Increased density of dwelling units is encouraged in order to provide increased housing opportunities close to the hospitals, Central Business District and near major employers and Montana State University - Billings.

Developer:

_____

_____

_____

Requested Score _____

Planning:

_____

_____

_____

Recommended Score _____

Multiplier x3 _____

Total Points _____

Final Plan Review:

_____

_____

_____

Awarded Score _____

Multiplier x3 _____

Total Points _____

Standards and Scoring:

| Minimum Lot Size | Number of Units |
|---|---|
| 2,500 square feet | 1 |
| 4,000 square feet | 2 |
| 5,000 square feet | 3 |
| 6,000 square feet | 4 |
| (500 square feet) | (each additional unit) |

| Points | Density |
|---|---|
| 2 | 21% or more units than the standard |
| 1 | Up to 20% more units than the standard |
| 0 | Fewer units than the standard |

**Compatibility:**

All efforts toward promoting neighborhood compatibility are encouraged, such as:

1. Having resolved all differences between proposed development and the affected neighborhood;
2. Keeping the development compatible with and sensitive to the immediate environment of the site and neighborhood relative to architectural design; scale, bulk and building height, disposition and orientation of buildings on the lot, and visual integrity;
3. Having conflicts between the proposed development and the surrounding land uses effectively mitigated; and
4. Designing the project so that any additional traffic generated does not have significant adverse impact on surrounding development, and the street system.

Developer:

_____

_____

_____

Requested Score _____

Planning:

Recommended Score _____

Multiplier x3 _____

Total Points _____

Final Plan Review:

Awarded Score _____

Multiplier x3 _____

Total Points _____

Standards and Scoring:

Compatibility has been stressed throughout this document. The reason for that is the desire to protect the residents in the area and to preserve the neighborhood-type setting now enjoyed. Past construction activity has threatened that quality, and this chapter is an attempt to instead enhance the area.

Again, it is recognized that the primary purpose for the corridor is to serve as a central location for medically-related services and products, with all other land uses being secondary in importance. However, the permit zoning system will allow the city to have more control over the area's development than in the past in order to protect both the existing residences and the area to the immediate west of the medical corridor from encroachment by unsightly or inappropriate land uses. At the same time, the city will be able to encourage development which will be beneficial to the entire community in terms of design, health care, and economic return.

Protection of the remaining areas of single-family residences must be assured through communication between the developers and the property owners, and through design. In particular, compatibility is sought for the homes south of 11th Avenue North on North 30th Street, between 12th and 10th Avenues North on North Broadway, and the areas of homes south of 11th Avenue North on North 29th Street. It is these areas which are most in need of compatible, sensitive development around their environs.

| Points | Compatibility Effort |
|---|---|
| 2 | Developer met with adjacent property owners on own accord in effort to keep differences to a minimum and achieved high degree of compatibility with immediate environment. |
| 1 | Developer either met with adjacent property owners on own accord to assure compatibility or achieved high degree of architectural compatibility. |
| 0 | No effort made. |

**Access on North 27th Street:** If the project is proposed on property adjacent to North 27th Street, it is encouraged that limited access be provided on North 27th Street and, where applicable, side streets be used for accessibility.

Developer:

_____

_____

_____

Requested Score _____

City Traffic Engineer:

_____

_____

_____

Recommended Score _____

Multiplier x2 _____

Total Points _____

Final Plan Review:

_____

_____

_____

Awarded Score _____

Multiplier x2 _____

Total Points _____

Standards and Scoring:

Billings, Montana City Code; Chapter 6, "Buildings and Building Regulations," Section 6-1208 (Curb Cut Regulations).

If property abuts an avenue, access to the site is to be provided by a curb into the avenue rather than North 27th Street.

The minimum standards from the Curb Cut Ordinance shall be met, as well as the American Association of State Highway and Transportation Officials' standards for site distance.

| Points | Access |
|---|---|
| 2 | O access on North 27th Street if avenue is available; otherwise 1 access when frontage is only along North 27th Street; shared access between two properties with property widths of 60 feet or less. |
| 1 | 1 access for property with 60 feet or less frontage; 2 accesses for any single property tract or business establishment in excess of 60 feet frontage when distance between curb cuts exceeds minimum standard of 25 feet. |
| 0 | 2 accesses for property or business establishment in excess of 60 feet frontage with 25 feet distance between curb cuts; no effort to use avenue for access when possible to do so. |

**Architectural Design:** Development design is encouraged to be either compatible in design with the neighboring properties or promote harmonious transitions in scale and character in areas between different land uses. Design should thus be appropriate to the site and function of the project and should promote interior energy conservation measures.

Developer:

_____

_____

_____

Requested Score _____

Building Official:

_____

_____

_____

Recommended Score _____

Multiplier x2 _____

Total Points _____

Planning:

_____

_____

_____

Recommended Score _____

Multiplier x2 _____

Total Points _____

Final Plan Review:

_____

_____

_____

Awarded Score _____

Multiplier x2 _____

Total Points _____

Standards and Scoring:

Examples of design features promoting energy conservation include double-glazed windows, thickness or density of walls and doors, insulation, and sealing around windows and doors.

Examples of compatibility are use of similar building materials, closeness in scale with neighboring structures, color or style similarities.

Solar collectors are to be designed as harmoniously as possible with the natural features of the building or property.

Billings, Montana City Code, Chapter 6, "Buildings and Building Regulations": All appropriate sections.

| Points | Scale of Project |
|---|---|
| 2 | Either achieves highest possible compatibility in design with surrounding area or provides for maximum level of effort to be harmonious with adjacent, differing land uses, plus incorporating interior energy conservation measures. |
| 1 | Makes an effort to be compatible or harmonious and incorporates interior energy conservation measures. |
| 0 | No effort made in design or interior energy conservation. |

**Building Materials:** The use of building materials for structures and fences which are compatible with the surrounding environment is encouraged.

Developer:

_____

_____

_____

Requested Score _____

Building Official:

_____

_____

_____

Recommended Score _____

Multiplier x2 _____

Total Points _____

Planning:

_____

_____

_____

Recommended Score _____

Multiplier x2 _____

Total Points _____

Final Plan Review:

_____

_____

_____

Awarded Score _____

Multiplier x2 _____

Total Points _____

Standards and Scoring:

The use of materials such as wood, brick, or siding which have subdued colors and help blend the building into the landscape is encouraged.

Loud, obnoxious colors, untreated block, and plain metal buildings visible from streets are discouraged.

| Points | Materials Used |
|---|---|
| 2 | When feasible, building materials are natural; colors are otherwise subdued; exceptional effort made to be compatible with neighboring building materials. |
| 1 | Colors are subdued and building materials are generally compatible. |
| 0 | Loud colors, untreated block, plain metal buildings visible from street, and incompatible materials with surroundings. |

**Removal of Dwellings**: The removal of existing dwellings more than forty-five (45) days prior to the start of construction is discouraged. In addition to this, the proper abandonment of existing utility services is required, unless services will be reused.

Developer:

_____

_____

_____

Requested Score _____

Building Official:

_____

_____

_____

Recommended Score _____

Multiplier x1 _____

Total Points _____

Final Plan Review:

_____

_____

_____

Awarded Score _____

Multiplier x1 _____

Total Points _____

Standards and Scoring:

Billings, Montana, Chapter 6, "Buildings and Building Regulations": Article 6-1000.

A cash bond will be deposited with the City in order to ensure the meeting of the deadlines when either "2" or "1" point(s) are sought. The City Administrator will set the terms and conditions of the bond.

| Points | Removal of Dwellings |
|---|---|
| 2 | Dwelling to be removed less than 30 days prior to project start-up date. |
| 1 | Dwelling to be removed 45 to 30 days prior to project start-up date. |
| 0 | Dwelling to be removed over 45 days in advance of project start-up date. |

**Residential Multi-Family:** Residential multiple family development is encouraged in the southern portion of the medical corridor area and along the west side of North 30th Street.

Developer:

_____

_____

_____

Requested Score _____

Planning:

_____

_____

_____

Recommended Score _____

Multiplier x1 _____

Total Points _____

Final Plan Review:

_____

_____

_____

Awarded Score _____

Multiplier x1 _____

Total Points _____

Standards and Scoring:

1990 Yellowstone County Comprehensive Plan.

| Points | Location of Proposed Multi-Family Development |
|---|---|
| 2 | Between 9th Avenue North and 7th Avenue North; or along the west side of North 30th Street between 9th Avenue North and Grandview Boulevard. |
| 1 | Between 11th Avenue North and 9th Avenue North. |
| 0 | North of 11th Avenue North. |

**Transit:** Developments are encouraged to promote the use of MET by residents, employees and patrons.

Developer:

_____

_____

_____

Requested Score _____

MET Transit:

_____

_____

_____

Recommended Score _____

Multiplier x1 _____

Total Points _____

Final Plan Review:

_____

_____

_____

Awarded Score _____

Multiplier x1 _____

Total Points _____

Standards and Scoring:

MET Transit Bus Shelter Specifications.

Billings, Montana City Code, Chapter 7, "Businesses and Business Regulations": Article 7-1000.

Upon the developer's request, staff will establish criteria for awarding one (1) or two (2) points for each specific development. These criteria may include, but are not limited to, such items as providing funding for bus shelters, benches, shelter maintenance agreements, subsidized bus passes or fares for development users, schedule displays, and advertising.

The developer can then secure the one (1) or two (2) points by agreeing to comply with the criteria. If the developer does not agree that the criteria are appropriate for the specific development, the criteria established can be appealed to the City Council.

No effort made will result in a zero score.

**Multiple-Use Development:** A development which provides facilities for more than one function is encouraged. Examples of such developments are an office building with child care facilities for employees and a building offering ground floor commercial/office space, as well as, multiple family units on the upper floors.

Developer:

_____

_____

_____

Requested Score _____

Planning:

_____

_____

_____

Recommended Score _____

Multiplier x1 _____

Total Points _____

Final Plan Review:

_____

_____

_____

Awarded Score _____

Multiplier x1 _____

Total Points _____

Standards and Scoring:

Billings, Montana City Code:

Chapter 6, "Building and Building Regulations," Article 6-1200.

1990 Yellowstone County Comprehensive Plan.

Uses being proposed in a development should be uses which are allowed within the existing zoning categories of either Residential Professional or Neighborhood Commercial.

| Points | Number of Uses |
|---|---|
| 2 | 3 or more |
| 1 | 2 |
| 0 | 1 |

**Pollution:** Developments are encouraged to be designed so that odor and air quality are controlled at its source or by the structure from which it is emitted so it does not constitute a nuisance.

Developer:

_____

_____

_____

Requested Score _____

City Engineer:

_____

_____

_____

Recommended Score _____

Multiplier x1 _____

Total Points _____

Final Plan Review:

Recommended Score _____

Multiplier x1 _____

Total Points _____

Standards and Scoring:

If determined that the proposed development will adversely affect air quality, the city can refer the proposal to the County Air Pollution Control Board.

| Points | Mechanism |
|---|---|
| 2 | Maximum protection from generating air and odor pollution will be given. |
| 1 | Adequate protection from generating air and odor pollution will be given. |
| 0 | Minimal effort to be made to protect from possibility of generating air and odor pollution. |

## SEC. 27-913. PLANT MATERIALS FOR LANDSCAPING AND BUFFERYARDS.

(a) *Rules and Regulations.* The City Administrator shall promulgate and publish rules and regulations which will be on file at the Parks, Recreation, and Public Lands Department specifying the plant materials and standards which must be met in order to satisfy the requirements of landscaping and bufferyards. The rules and regulations will be used to determine which plant materials will satisfy the requirements of this chapter. The plant materials are listed by type: Conifers and evergreen trees, evergreen shrubs, deciduous trees, deciduous shrubs, ground covers, and vines.

Although the rules and regulations will not generally specify the location or spacing of plant material required, all plant materials shall be installed to maximize achieving the purpose(s) for which the planting is required. In the case of bufferyard planting, this means that plant material shall be located so as to achieve the maximum level of protection to the less intense use.

(b) *Minimum Plant Size.* Unless otherwise specifically indicated elsewhere in this chapter, all plant materials shall meet the minimum size standards set forth in Table 1.

TABLE 1.

| *Plant Material Type* | *Minimum Size* | |
|---|---|---|
| | *Planting in Bufferyards Abutting Vacant Lands* | *All Other Plantings* |
| Canopy tree: | | |
| Single stem | $1_{1/2}$ inch caliper | $2_{1/2}$ inch caliper |
| Multi-stem clump | 6 feet (height) | 10 feet (height) |
| Understory tree | 4 feet (height) | $1_{1/2}$ inch caliper |
| Evergreen tree | 3 feet (height) | 5 feet (height) |
| Shrub | | |
| Deciduous | 15 inch (height) | 24 inch (height) |
| Evergreen | 12 inch (height) | 18 inch (height) |

(c) *Existing Plant Material.* Existing, healthy plant material may be counted as contributing to the total plant material required by this regulation.

**SEC. 27-914. REVIEW CHART - ALL CRITERIA.**

(a) *Absolute Criteria:* *Complied With*

| | | | | |
|---|---|---|---|---|
| 1. | Building Standards | Yes_____ | No_____ | N/A_____ |
| 2. | Utilities | Yes_____ | No_____ | N/A_____ |
| 3. | Vehicular Traffic | Yes_____ | No_____ | N/A_____ |
| 4. | Pedestrian Access | Yes_____ | No_____ | N/A_____ |
| 5. | Public Facilities | Yes_____ | No_____ | N/A_____ |
| 6. | Public Right-of-Way | Yes_____ | No_____ | N/A_____ |
| 7. | Lighting | Yes_____ | No_____ | N/A_____ |
| 8. | Drainage | Yes_____ | No_____ | N/A_____ |
| 9. | Signage | Yes_____ | No_____ | N/A_____ |
| 10. | Noise | Yes_____ | No_____ | N/A_____ |
| 11. | Parking | Yes_____ | No_____ | N/A_____ |

A proposal must receive a "Yes" answer to all of the above criteria, if applicable, in order to be considered for approval.

Does the proposal qualify for a permit based on the above criteria? Yes_____ No____

(b)

| *Relative Criteria* | | *Points Earned* |
|---|---|---|
| 1. | Building Scale | _____ |
| 2. | Landscaping | _____ |
| 3. | Parking | _____ |
| 4. | Land Use | _____ |
| 5. | Density | _____ |
| 6. | Compatibility | _____ |
| 7. | Access on North 27th Street | _____ |
| 8. | Architectural Design | _____ |
| 9. | Building Materials | _____ |
| 10. | Removal of Dwellings | _____ |
| 11. | Residential Multi-Family | _____ |
| 12. | Transit | _____ |
| 13. | Multiple-Use | _____ |
| 14. | Pollution | _____ |
| | TOTAL | _____ |

Minimum Points Required. Seventy (70) percent of total applicable points possible for medically-related land use proposal; seventy-five (75) percent of total applicable points possible for nonmedical-related land use proposal.

Proposal (has_____)(has not_____) attained minimum points required to total applicable points.

Proposal qualifies for a permit. Yes_____ No_____

**SEC. 27-915. EXISTING DEVELOPMENT.**

(a) Should an existing development propose to externally remodel fifty (50) percent or more of the building, have an addition put on in excess of ten (10) percent of the existing building, change its use, or create some nonbuilding improvements (e.g., parking lots, fences), then certain provisions shall be complied with. The property will have to comply with all of the applicable absolute criteria and address four (4) of the relative criteria of the permit system before a permit is issued by the Zoning Coordinator.

(b) Existing developments which involve the external remodeling of less than fifty (50) percent of the building or an addition of ten (10) percent or less onto an existing building must comply with the absolute criteria. The relative criteria will not be addressed by these projects. However, if the existing development is a single-family

dwelling or a duplex now meeting and proposed to continue meeting the standards of the Residential 6,000 (R-60) zoning category, then it will not need to go through this permit procedure for remodeling, additions, or fences. When these conditions are met, the building permit shall be issued for these development types.

(c) Internal remodeling projects (which are not changing the use of the building) will be exempt from this chapter and will go through the regular building permit process.

(d) Parking lots for existing developments which are proposed to add ten (10) or fewer spaces for off-street parking will go through this section's process. All other parking lots will go through the entire permit zoning procedure.

| **Relative Criterion** | **Awarded Score** | **Multiplier** | **Points Earned** | **Maximum Points** |
|---|---|---|---|---|
| Building Scale | | 3 | | 6 |
| Landscaping | | 3 | | 6 |
| Architectural Design | | 2 | | 4 |
| Building Materials | | 2 | | 4 |
| Total Maximum Points | | | | 20 |

(e) All building permit applications for existing development must receive a "yes" to all applicable absolute criteria plus achieve a minimum score of seventy-five (75) percent among the applicable relative criteria before a project can be approved and a building permit issued. Thus if all four (4) criteria apply, the applicant must achieve at least fifteen (15) points before a permit is issued. The Zoning Coordinator will notify the applicant of the awarded scores. Depending upon the scope of the project it is suggested that the Zoning Coordinator "fast track" this process and allow no more than two (2) weeks for departmental review of the preliminary plan BMCC Section 27-908(B) and one (1) week for review of the final plan BMCC Section 27-908(C). A conceptual review BMCC Section 27-908(A) is not required for this section but is highly recommended. The same notification procedures will be used as is outlined in BMCC Section 27-908 for contacting department representatives and adjacent property owners.

## SEC. 27-916. APPEAL PROCESS RELATING TO ISSUANCE OF DENIAL OF PERMIT.

(a) Generally. The following outlines the appeal process which can be exercised by either a developer who is denied a permit or an adjacent property owner who wishes to protest or appeal the city staff decision to grant a permit for a particular development.

(b) Developer Appeal. Should a permit be denied, a developer will receive a written explanation from the Zoning Coordinator as to the reasons for the denial within two (2) weeks of the final plan's submittal. The developer than has fourteen (14) days from the date on the letter in which to file a request for appeal before the City Council. The petition requesting an appeal and a copy of the Zoning Coordinator's letter giving the reason(s) for the denial of the permit shall be filed with the City Clerk and shall be placed on the City Council agenda within thirty (30) days after receipt of the petition. The City Council will review the petition and vote (by simple majority) whether an appeal may be filed for their consideration. If permission to appeal is not granted, then the Zoning Coordinator's denial of the permit stands. Should permission be given to hear an appeal, then the developer will have thirty (30) days in which to file a written appeal with the City Clerk. It shall include a copy of the Zoning Coordinator's explanation for denial of the permit, and the developer's reasons why the permit should be issued. A copy of this appeal must be sent to the Zoning Coordinator.

The City Clerk shall then place the item on the City Council agenda. The City Clerk shall notify all adjacent property owners as outlined in this document, by letter, of the time and place of the City Council meeting so that they may appear and comment on the appeal.

(c) Adjacent Property Owner Appeal. Once the Zoning Coordinator decides to grant a permit, the Zoning Coordinator must notify all adjacent property owners (including all lands directly opposite the site) by letter and inform them that they have fourteen (14) days from the date of the letter to submit a request of an appeal of the decision to the City Council. If a request for appeal is not submitted for council consideration, then the decision of the Zoning Coordinator stands. If the property owners want to submit a petition requesting an appeal, it shall be filed along with the Zoning Coordinator's letter with the City Clerk, and the clerk shall place the petition on the City Council agenda within thirty (30) days. Should the council agree to hear the appeal, then the property owners filing the request must submit, in writing, reasons why adjacent property owners feel the permit should not be granted. The filing must take place within thirty (30) days of the granting of permission by the City Council to hear the appeal and shall be filed with the City Clerk.

If the affected property owners do not appeal the decision to grant the permit within the fourteen (14) day period, they have waived their right to appeal and the Zoning Coordinator shall then issue a permit for the proposed development. If a request for an appeal is filed, a copy must be sent to the Zoning Coordinator by the City Clerk, and any issuance of a permit shall be delayed until the City Council can resolve the matter.

## ARTICLE 27-1000. INTERCHANGE/ENTRYWAY ZONING DISTRICTS

### SEC. 27-1001. INTENT.

The intent of the Interchange/Entryway Zoning Districts is to promote attractive, high quality development, to provide an appealing image of the City of Billings, to the traveling public and also the community. Further, it is the intent of this district to maintain a sensitivity toward existing development while preserving scenic vistas and protecting environmentally sensitive areas, including the Yellowstone River Corridor.

OBJECTIVES

(a) Promote a unique, attractive physical landscape through topographic variations, water areas, native vegetation and scenic vistas;

(b) Create and preserve open space;

(c) Preserve and enhance unique qualities of the total environment;

(d) Encourage creativity in design;

(e) Provide for harmonious land design and quality site planning, which will produce a more desirable and attractive environment;

(f) Reduce the level of adverse impacts from the transportation system on adjoining lands;

(g) Promote development patterns in harmony with the goals and objectives of the 1990 Yellowstone County Comprehensive Plan; and

(h) Promote compatible land use transitions with a sensitivity toward existing residential uses.

### SEC. 27-1002. APPLICATION AND APPROVAL PROCESS.

All plans and applications for development and signs shall be submitted to the City-County Planning Department. All applications must be submitted in person and signed by the property owner, lessee, the contract purchaser or the authorized agent of the property owner.

Planning Department approval is to ensure compliance with the Zoning Regulations. This does not in anyway construe approval by any other city or county department. A building permit and Planning Department approval are required prior to construction.

Each application shall include, but not be limited to the following information:

(1) The name and address of the property owner;

(2) The name and address of the applicant;

(3) The legal description of the parcel;

(4) A map drawn to scale showing the dimensions, acreage, location of the parcel, north arrow, streets and adjacent land uses;

(5) A complete site plan drawn to a scale of no less than 1" = 40' showing the dimensions and locations of all structures, streets, paving, parking, landscaping, signage, waterways or other significant features of the development;

(6) Complete elevation drawings drawn to scale including the dimensions and height of the structure; and

(7) Signage Plan specifications and location. (This applies to applications for signs only.)

Within fifteen (15) working days following the submittal of a complete application, the Planning Director or his/her designee shall issue Planning Department approval for development or a denial of the application, unless the applicant consents in writing to an extension of the review period. Should the application be denied, the applicant shall be notified in writing specifying all areas of noncompliance with this chapter.

### SEC. 27-1003. DEFINITIONS.

Terms not specifically defined in this chapter shall use the same meanings as they are defined in BMCC Section 27-201. The standard dictionary meaning shall be applied to terms not otherwise defined.

### SEC. 27-1004. ZONING DISTRICTS.

(a) **Entryway Light Commercial Zone (ELC):** The purpose of the Entryway Light Commercial zone is to provide limited entryway commercial convenience facilities, serving the nearby community.

(1) *Permitted Uses:* The following uses shall be less than three thousand (3,000) square feet gross floor area (GFA)

Accessory uses and structures associated with a permitted principal structure

Apparel and accessory stores

Bakeries, retail

Banking and financial institutions

Barber and beauty shops

Book and stationery stores

Coin-operated laundry and dry cleaning pick up station

Convenience stores, with or without gas sales

Food stores

General merchandise stores

Hardware stores

Home furniture and furnishing stores

Mailing, photocopying, blueprinting and duplicating services

Newsstands

Offices

Paint stores

Pharmacies

Photo-finishing labs

Restaurants without the sale of alcoholic beverages

Shoe repair shops

Watch, clock and jewelry repair

(2) *Special Review Uses:* Any of the above-permitted uses greater than three thousand (3,000) square feet GFA

Car washes

Commercial recreation uses only as listed below:

Arcades

Batting cages

Boat Rentals

Bowling alleys

Canoe and kayak rentals

Day camps

Driving ranges

Golf courses

Handball courts

Ice skating rinks

Miniature golf

Parks

Playing fields

Racquetball courts

Riding stables

Roller skating rinks

Schools and camps for sports instruction

Swimming pools

Tennis courts

Waterslides

Gravel and/or sand extraction

Mixed use developments which include residential uses

Other retail uses similar in nature to those listed above

Restaurants with the sale of alcoholic beverages for on-premise consumption

(b) **Entryway General Commercial Zone (EGC):** The purpose of the Entryway General Commercial Zone is to provide a specialized classification for hotels, restaurants and other tourist-related facilities near major highway interchanges.

(1) *Permitted Uses:* Accessory uses and structures associated with a permitted principal structure

Apparel and accessory stores

Automobile and truck sales (New and Used)

Automobile rental agencies

Automotive service stations

Bakeries, retail

Banking and financial institutions

Barber and beauty shops

Book and stationery stores

Broadcasting studios, radio and television

Car washes

Coin-operated laundry and dry-cleaning pick up station

Commercial recreation uses only as listed below:

Arcades

Batting cages

Boat rentals

Bowling alleys

Canoe and kayak rentals

Day camps

Driving ranges

Golf courses

Handball courts

Ice skating rinks

Miniature golf

Parks

Playing fields

Racquetball courts

Riding stables

Roller skating rinks

Schools and camps for sports instruction

Swimming pools

Tennis courts

Waterslides

Convenience stores, with or without gas sales

Food stores

General merchandise stores

Hardware stores

Home furniture and furnishing stores

Hotels/Motels

Laundry and dry cleaning establishments

Mailing, photocopying, blueprinting and duplicating services

Newsstands

Offices

Paint stores

Pharmacies

Photo-finishing labs

Recreational vehicle sales and service

Restaurants without the sale of alcoholic beverages

Retail nurseries, lawn and garden supply stores

Shoe repair shops

Signs, computer controlled variable message

Theaters (Indoor)

Tire sales

Watch, clock and jewelry repair

Wholesale uses not to exceed three thousand (3,000) square feet gross floor area (GFA)

(2) *Special Review Uses*

Campgrounds

Commercial Recreation uses only listed as below:

Go-cart tracks

Rodeos

Roping arenas

Gravel and/or sand extraction

Mixed use developments which include residential uses

Other retail uses similar in nature to those listed above

Restaurants with the sale of alcoholic beverages for on-premise consumption

Truck stops

Veterinary clinics

a. Boarding

b. Outpatient Only

Wholesale uses not to exceed ten thousand (10,000) square feet gross floor area (GFA)

Zoos

(c) **Entryway Mixed Use Zone (EMU):** The purpose of the Entryway Mixed Use Zone is to provide for commercial recreation development and a mixture of low intensity residential and low intensity commercial/office use. This zone allows for low impact commercial and residential development that will have minimal adverse effect on adjacent natural resources and existing uses.

(1) *Permitted Uses:*

Accessory uses and structures associated with a permitted principal structure

Campgrounds

Commercial recreation uses only listed as below:

Batting cages

Boat rentals

Canoe and kayak rentals

Day camps

Driving ranges

Golf courses

Handball courts

Ice skating rinks

Miniature golf

Parks

Playing fields

Racquetball courts

Riding stables

Schools and camps for sports instruction

Swimming pools

Tennis courts

Mixed use developments (incorporating Office/Commercial uses permitted in the EGC zone and residential uses)

Residential, Single-family

Residential, Multi-family

Restaurants without the sale of alcoholic beverages for on-premise consumption

(2) *Special Review Uses:*

Commercial Recreation uses only listed as below:

Go-cart tracks

Rodeos

Roping arenas

Gravel and/or extraction

Restaurants with the sale of alcoholic beverages for on-premise consumption

(d) **Entryway Light Industrial (ELI):** The purpose of the Entryway Light Industrial zone is to provide large lots located directly accessible to arterial and other transportation systems for warehousing and light manufacturing and allow for limited commercial facilities for the adjacent community and interstate travelers.

(1) *Permitted Uses:*

Accessory uses and structures associated with a permitted principal structure

Automotive service stations

Auto repair

Auto supply stores

Bakery, wholesale

Broadcast studios, radio and television

Bus terminal operations with or without maintenance facilities

Car washes

Coin operated laundry and dry cleaning with pick up station

Convenience stores, with or without gas sales

Cabinet and furniture manufacturing

Engineering, physical and biological research laboratories

Funeral homes, mortuaries, and crematories

General warehousing and compartmentalized storage under 250,000 square feet GFA

Heavy equipment sales and service

Hotels/Motels

Laundry and dry-cleaning establishments

Light manufacturing:

Computer and Office Equipment (SIC-357)

Household Audio & Video Equipment and Audio Recording (SIC-365)

Communication Equipment (SIC-366)

Electronic Components & Accessories (SIC-367)

Measuring, analyzing & controlling instruments; photographic, medical and optical goods, watches, clocks (SIC-38)

Mailing, photocopying, blueprinting and duplicating services

Mobile Home Sales

Offices; professional, private, government

Photo-finishing labs

Recreational vehicle sales and service

Restaurants without the sale of alcoholic beverages

Retail uses allowed in the Entryway General Commercial

Retail nurseries, lawn and garden supply stores

Tire sales

Truck stops

Trucking terminal with or without maintenance facilities

US Postal Services with or without terminal facilities

Vet Clinics

Wholesale Trade (Except SIC-5093)

(2) *Special Review Uses*

Gravel and/or sand extraction

Mixed use developments

Passenger and freight terminals

Restaurants with the sale of alcohol beverages for on-premise consumption

Wood container manufacturing

Wood building and mobile home manufacturing

Misc. Wood Products manufacturing

Retail over 250,000 GFA

Warehousing over 250,000 GFA

## SEC. 27-1005. DEVELOPMENT STANDARDS.

Minimum lot area for all non-residential development shall be twenty-thousand (20,000) square feet in the ELC, EGC , EMU, and ELI zoning districts.

Residential developments shall meet the minimum lot area, setbacks, lot coverage and height limits of the Residential 9,600 (R-9,600) zoning district for single family projects or for the Residential Multi-Family - Restricted (RMF-R) zoning district for multiple-family developments, as listed in BMCC Section 27-308.
Minimum building setback from property line:

| | EMU | EGC | ELC | ELI |
|---|---|---|---|---|
| *Adjacent to Interstate right-of-way | 25 feet | 25 feet | 25 feet | 25 feet |
| *Adjacent to any other right-of-way | 25 feet | 25 feet | 25 feet | 25 feet |
| Adjacent to a residential zone | 25 feet | 25 feet | 25 feet | 25 feet |
| Adjacent to a non-residential zone | 10 feet | 10 feet | 10 feet | 10 feet |
| Structure Height | 30 feet | 40 feet | 30 feet | 40 feet |
| Maximum Lot Coverage | 50% | 50% | 50% | 50% |

*All arterial setbacks as outlined in BMCC Section 27-602 must be maintained.

Setback areas not occupied by required bufferyards may be used for, but not limited to the following: display area, driveways and non-required parking.

All current City and County codes shall apply, including but not be limited to the following: building, zoning, site development, parking and drainage regulations that are not directly addressed in this chapter. Where requirements are addressed in one or more regulations, the most stringent shall apply.

*Traffic Accessibility Studies:* Current traffic accessibility study requirements in the subdivision and site development regulations shall apply, in addition to those requirements outlined below.

The following uses shall be required to submit traffic accessibility studies:

Drive-through services

Truck stops

## SEC. 27-1006. LANDSCAPING STANDARDS.

(a) *Definitions:*

(1) Canopy tree: A species of tree which normally bears crown foliage no lower than six (6) feet above ground level upon maturity. Minimum size of canopy tress shall be two and one-half (2½) inches in caliper.

(2) Evergreen tree or shrub: A tree or shrub of a species which normally retains leaves/needles throughout the year. Minimum size of evergreen trees shall be five (5) feet in height.

(b) *Street Frontage Landscaping*. All commercial zones are required to place a bufferyard (landscaping strip) adjacent to and along the length of all rights-of-way, excluding driveways. Rights-of-way include the following: ditches adjacent to streets, principal arterial streets, minor arterial streets, collector streets, local streets and US Interstate 90.

The developer shall have the option of bufferyard widths (see options below). Placement and landscaping design shall be at the discretion of the developer. It is recommended that a design professional or local nursery be contacted for assistance with the development of the landscape design.

*Bufferyard Requirements:* The developer shall have the option of one (1) of the following three (3) bufferyards. Bufferyard depth is measured from the property line inward. Any buffer area which overlaps another buffer area shall be subtracted from the total to avoid double counting.

Number of trees and shrubs required per one hundred (100) feet of frontage:

(1) Twenty-five (25) foot wide bufferyard

Five (5) Canopy or evergreen trees
Ten (10) Shrubs

(2) Twenty (20) foot wide bufferyard
Ten (10) Canopy or evergreen trees
Fifteen (15) Shrubs

(3) Fifteen (15) foot wide bufferyard
Fifteen (15) Canopy or evergreen trees
Twenty (20) Shrubs

The following criteria shall also apply to the bufferyards.

(1) The landscape strip shall be contoured. Berming shall be one (1) foot of rise to four (4) feet of run with a minimum of three (3) feet in height. Depressions shall be no lower than the existing grade of the site.

(2) All landscaped areas shall contain ground cover such as sod, shrubs, flower beds or organic materials. No more than ten (10) percent of the landscaped area shall contain fountains, rock, bark chips, stepping stones or similar material.

(3) All landscaped areas shall be irrigated, maintained and kept free of weeds, debris and litter.

(c) *Off-Street Parking Lot Landscaping.* Landscaping shall be provided within all parking areas. The following requirements shall apply:

(1) A minimum of twenty (20) square feet of landscaped area shall be provided for each parking space.

(2) Two (2) canopy and/or evergreen trees and five (5) shrubs shall be required for every nine (9) parking spaces.

(3) All landscaped areas shall contain ground cover such as sod, shrubs, flower beds or organic materials. No more than ten (10) percent of the landscaped area shall contain fountains, rock, bark chips, stepping stones or similar material.

(4) The minimum width and/or length of any parking lot landscaped area shall be five (5) feet.

(5) Internal parking lot landscaping provided shall be proportionately dispersed, at the developers discretion, in order to define aisles and limit unbroken rows of parking. The maximum horizontal or vertical unbroken length shall be limited to one hundred (100) feet. Landscaped areas provided shall be in a scale proportionate to parking lot.

(6) Any development that has parking abutting a required bufferyard, may extend the width of that bufferyard a minimum of five (5) feet and include the additional required parking landscaping plant material. The minimum bufferyard width and landscaping material is required in addition to the parking landscaping.

(7) All landscaped areas shall be irrigated, maintained and kept free of weeds, debris and litter.

(d) *Protection of Landscaped Areas.* Landscaped areas within parking lots or the along perimeter of the property must be protected from vehicular traffic through the use of continuous concrete curbs, extruded asphalt or other approved permanent barriers.

(e) *Commercial Uses Abutting Residential Uses.* All commercial uses abutting residential uses shall install a bufferyard. The bufferyard shall be ten (10) feet wide and shall contain ten (10) evergreen and/or canopy trees and ten (10) shrubs per one hundred (100) lineal feet. A solid fence or wall that is architecturally compatible in color and design with the building, shall be required on the property line. The fence height shall be a minimum of six (6) feet. Chain link or other wire fencing material is prohibited.

(f) *Recommended Tree Types*. It is recommended that the developer work with the City Parks Department, a local greenhouse operator, landscape architect or other design professional to determine the species of trees that are most suitable for each situation. The use of native, drought-tolerant plant material is strongly encouraged. Evergreen trees are encouraged for bufferyards and canopy trees are encouraged for parking areas, however, the planting of trees should be done in such a manner as to provide maximum solar efficiency throughout the site.

A list of recommended native plant material shall be available at the Planning Department.

(g) *Fractions in the Calculation of Number of Trees and Shrubs.* In the calculation of trees and shrubs for bufferyards or parking landscaping, all fractions shall be rounded to the nearest whole number.

## SEC. 27-1007. BUILDING DESIGN STANDARDS.

(a) All buildings shall be completed on all sides with an acceptable finishing material. The following materials are acceptable: brick, fluted block, colored textured block, glass, stucco, architectural concealed fastener metal panels, exterior insulation and finishing systems (i.e. Dryvit, etc.), stone or wood. Exposed seam metal buildings shall be prohibited unless covered with an acceptable finishing material.

(b) Roofs shall be finished with a material that is architecturally compatible in color and design with the construction of the building. Metal roofs, fascia and mansards shall be limited to the following: standing seam, metal shakes or shingles and architectural metal treatments. All mechanical equipment placed on top of any roof shall be screened by a parapet or other similar architectural apparatus being at least the height of the mechanical equipment. Pitched roofs are encouraged whenever possible.

(c) Long, flat facades, having local street or interstate highway frontage, having more than one hundred (100) lineal feet are prohibited. Buildings over one hundred (100) feet in length shall incorporate one of the following: recesses, off-sets, angular forms, landscaping features or other architectural features such as bell towers, clock towers, to provide a visually interesting shape. The break in the facade shall be minimum of eight (8) feet in length. A single uninterrupted length of a facade shall not exceed one hundred (100) lineal feet. It is encouraged that each offset area contain landscaping or other similar amenities which will complement the offset area.

### SEC. 27-1008. ADDITIONAL PROVISIONS FOR COMMERCIAL USES.

(a) *Storage of Merchandise.* Any permitted storage of merchandise outside an approved building shall be within an area enclosed with a sight obscuring fence at least six (6) feet in height that is architecturally compatible in color and design with the building. However, promotional displays, vehicle sales lots and plant materials may be displayed outside of an approved building or enclosed area so long as they are placed appurtenant to a building wherein the business displays the bulk of its goods for sale. In addition, retail nurseries shall be exempt from the enclosure of plant materials. Bufferyards or required landscaping shall not be used for the displaying of merchandise. Chain link or other type of wire fencing is prohibited.

(b) *Site Lighting:*

(1) All outdoor lighting shall be designed, located and mounted at heights no greater than:

a. Eighteen (18) feet above grade for non-cutoff lights; and
b. Thirty-five (35) feet above grade for cutoff lights.

(2) *Maximum Illumination*. All outdoor lighting shall be designed and located such that the maximum illumination measured in footcandles at the property line shall not exceed three-tenths (0.3) footcandle for non-cutoff lights and one and five-tenths (1.5) footcandles for cutoff lights.

(c) *Storage of Junk.* No person shall store junk, partially or completely dismantled vehicles, or salvaged materials in any commercial zone outside a building. In the case of automobile repair shops, such materials must be enclosed within a building or an area having a sight obscuring fence at least six (6) feet in height. Chain link or other type of wire fencing is prohibited.

(d) *Solid Waste Area.* All solid waste storage facilities shall be located within an area enclosed with a sight obscuring fence or wall that is architecturally compatible in color and design with the building. Chain link or other type of wire fencing is prohibited.

## SEC. 27-1009. SIGNS.

(a) *Intent.* This section shall not regulate official traffic or government signs; the copy and message of signs; signs not intended to be viewed from a public right-of-way; window displays; product dispensers and point of purchase displays; scoreboards on athletic fields; flags of any nation, government or fraternal organization; gravestones; barber poles; religious symbols; or any display or construction not defined herein as a sign.

(b) *Definitions.* Words and phrases used in this section are defined in this section. Principles for computing sign area are outlined in subsection E of this section.

(1) *Animated Sign:* Any sign that uses movement or change or lighting to depict action or create a special effect or scene.

(2) *Area of Sign:* The entire area of a sign including the area within a perimeter which forms the outside shape including the frame, forming an integral part of the display, but excluding the necessary supports or uprights on which the sign may be placed. The frame of a sign may be excluded from the area where such frame conveys no message and is constructed or affixed for aesthetic reasons beyond the necessary supports.

For computing the areas of any wall or canopy sign which consists of letters mounted or painted on a wall or canopy, the area shall be deemed to be the area of the smallest rectangular figure which can encompass all of the letters. (See below subsection E for calculation of sign area.)

(3) *Banner Sign:* Any sign (other than an official flag) made of cloth, paper or fabric of any kind, which is used to attract attention, whether or not imprinted with words or characters.

(4) *Beacon:* Any light with one (1) or more beams directed into the atmosphere or directed at one (1) or more points not on the same lot as the light source; also, any light with one (1) or more beams that rotate or move.

(5) *Building Marker:* Any sign indicating the name of a building and date and incidental information about its construction, which sign is cut into a masonry surface or made of bronze or other permanent material.

(6) *Canopy Sign:* Any sign that is a part of or attached to any awning, canopy or other fabric, plastic or structural protective cover over a door, entrance, window or outdoor service area, and which does not extend horizontally beyond the limits of the canopy.

(7) *Changeable Copy Sign:* A sign whose informational content can be changed or altered by manual or electric, electro-mechanical or electronic means. Changeable signs include the following types:

1. Manually Activated: Signs whose alphabetic, pictographic or symbolic information content can be changed or altered by manual means.

2. Electrically Activated: Signs whose alphabetic, pictographic or symbolic informational content can be changed or altered on a fixed display surface composed of electrically illuminated or mechanically driven changeable segments. Electrically activated signs include the following two (2) types:

   a. Fixed Message Electronic Signs: Signs whose basic informational content has been pre-programmed to include only certain types of information projections, such as time, temperature, predictable traffic conditions or other events subject to prior programming.
   b. Computer Controlled Variable Message Electronic Signs: Signs whose informational content can be changed or altered by means of computer-driven electronic impulses.

(8) *Copy:* The graphic content of a sign surface in either permanent or removable letter, pictographic, symbolic or alphabetic form.

(9) *Directional/Informational Sign:* An on-premise sign giving directions, instructions or facility information and which may contain the name or logo of an establishment but no advertising copy, e.g., parking or exit and entrance signs. The sign may contain a logo provided that the logo may not comprise more than twenty (20) percent of the total sign area.

(10) *Director:* The Planning Director of the County or his/her designee.

(11) *Flag:* Any fabric, banner or bunting containing distinctive colors, patterns, or symbols, used as a symbol of a government, political subdivision or other entity.

(12) *Freestanding Sign:* Any sign supported by structures or supports that are placed on, or anchored in, the ground and that are independent from any building or other structure, including monument signs.

(13) *Government Sign:* Any temporary or permanent sign erected and maintained by the city, county, state or federal government for traffic direction or for designation of or direction to any school, hospital, historical site or public service, property or facility.

(14) *Height of Sign:* The vertical distance measured from the highest point of the sign to the crown of the adjacent street, not including the interstate highway.

(15) *Lot:* Any piece or parcel of land or a portion of a subdivision, the boundaries of which have been established by some legal instrument of record, which is recognized and intended as a unit for the purpose of transfer or ownership.

(16) *Maintenance:* For the purposes of this chapter, the cleaning, painting, repair or replacement of defective parts of a sign in a manner that does not alter the structure of the sign.

(17) *Monument Sign:* A sign mounted directly to the ground with maximum height not to exceed six (6) feet.

(18) *Nonconforming Sign:* A sign which was erected legally, but which does not comply with subsequently enacted sign restrictions and regulations.

(19) *Portable Sign:* Any sign not permanently attached to the ground or other permanent structure, or a sign designed to be transported, including, but not limited to, signs designed to be transported by means of wheels; signs converted to A- or T-frames; menu and sandwich board signs; balloons used as signs; umbrellas used for advertising; and signs attached to or painted on vehicles parked and visible from the public right-of-way, unless said vehicle is used in the normal day-to-day operations of the business.

(20) *Principal Building:* A structure accommodating the principal use to which the property is devoted. Lots with multiple principal uses may have multiple principal buildings, but storage buildings, garages and other clearly accessory uses shall not be considered principal buildings.

(21) *Projecting Sign:* A sign, other than a flat wall sign, which is attached to and projects from a building, wall or other structure not specifically designed to support the sign. Supports shall be covered in a neat and orderly fashion. Guy wire support is prohibited.

(22) *Roof Sign, Above-peak:* Any sign erected and constructed wholly on and over the roof of a building, supported by the roof structure, and extending vertically above the highest portion of the roof.

(23) *Roof Sign, Integral:* Any sign erected or constructed as an integral or essentially integral part of a normal roof structure of any design, such that no part of the sign extends vertically above the highest portion of the roof and such that no part of the sign is separated from the rest of the roof by a space of more than six (6) inches.

(24) *Setback:* The distance from the property line to the nearest part of the applicable building, structure or sign, measured perpendicularly to the property line.

(25) *Sign:* Any device, fixture, placard or structure that uses any color, form, graphic, illumination, symbol or writing to advertise, announce the purpose of, or identify the purpose of a person or entity, or to communicate information of any kind to the public.

(26) *Street:* A public way for vehicular traffic, whether designated as a street, highway, thoroughfare, parkway, throughway, road, avenue, boulevard, land, place or however otherwise designated which has been dedicated to or acquired for public use and which extends the full width between right-of-way lines.

(27) *Street Frontage:* The length of the property line of any one (1) premises along each public right-of-way it borders excluding alleys, serviceways and the interstate highway.

(28) *Suspended Sign:* A sign that is suspended from the underside of a horizontal place surface and is supported by such surface.

(29) *Temporary Sign:* A non-permanent sign erected and maintained for a specific limited period of time.

(30) *Wall Sign:* Any sign attached parallel to, painted on the wall surface or erected and confined within the limits of an outside wall of any building or structure, which is supported by such wall or building, and which displays only one (1) sign surface. Wall signs shall not exceed twenty-two (22) inches in depth measured from the face on the wall on which the sign is mounted.

(31) *Wind-Driven Sign:* Any sign consisting of one (1) or a series of two (2) or more banners, flags, pennants, ribbons, spinners, streamers or other objects or material fastened in such a manner as to move upon being subjected to pressure by wind or breeze.

(32) *Window Sign:* Any sign, pictures, symbol or combination thereof, designed to communicate information about an activity, business, commodity, event, sale or service, that is placed inside a window or upon the window panes or glass and is visible from the exterior of the window.

(c) *Signs Prohibited.* All signs not expressly permitted under this section or exempt from regulation hereunder in accordance with the following section are prohibited. Such signs include, but are not limited to:

(1) Beacons;

(2) Wind-driven sign, except flags as defined in this section;

(3) Strings of lights not permanently mounted to a rigid background, except those exempt under the following section;

(4) Inflatable signs and tethered balloons;

(5) Portable signs;

(6) Animated signs;

(7) Above-peak roof signs;

(8) Banner signs;

(9) Abandoned signs;

(10) Snipe signs or signs attached to trees, telephone poles, public benches, streetlights or placed on any public property or public right-of-way; and

(11) Signs placed on vehicles or trailers which are parked or located for the primary purpose of displaying said signs (this does not apply to signs or lettering on buses, taxis, or vehicles operating during the normal course of business).

(d) *Signs Not Requiring Permits.* The following types of signs are exempted from permit requirements but must be in conformance with all other requirements of this section:

(1) Construction signs of sixteen (16) square feet or less;

(2) Special event or holiday lights or decorations;

(3) Nameplates of two (2) square feet or less;

(4) Public signs or notices, or any sign relating to an emergency;

(5) Real estate signs; (see below subsection I, 2)

(6) Political signs; (see below subsection I, 4)

(7) Interior signs not visible from the exterior of the building; and

(8) Directional signs not to exceed twelve (12) square feet in area or six (6) feet in height.

(e) *Calculation of Sign Area*. The sign area for a sign with more than one face shall be computed by adding together the area of all sign faces visible from any one point. When two (2) identical sign faces are placed back to back, so that both faces cannot be viewed from any point at the same time, and when such sign faces are part of the same sign structure, the sign area shall be computed by the measurement of one of the faces.

(f) *Maintenance.* All signs shall be properly maintained. Exposed surfaces shall be clean and painted if paint is required. Defective parts shall be replaced.

(g) *Lighting.* Unless otherwise prohibited by this section, all signs may be illuminated.

(h) *Changeable Copy*. Unless otherwise specified by this section, any sign herein allowed may use manual, or fixed message electronic sign.

Computer controlled variable message electronic signs shall be permitted provided that the bottom of the reader board is ten (10) feet above the crown of the adjacent road. Computer controlled variable message electronic signs shall not be permitted in the Entryway Light Commercial (ELC) and the Entryway Mixed Use (EMU) zones.

(i) *Signs Permitted in Residential Districts:*

(1) One (1) non-illuminated sign for each street frontage of a construction project, not to exceed forty-eight (48) square feet in sign area. Such signs may be erected thirty (30) days prior to beginning of construction and shall be removed thirty (30) days following completion of construction.

(2) One (1) non-illuminated real estate sign per lot or premises not to exceed sixteen (16) square feet in sign area for residential properties and thirty-two (32) square feet for commercial properties. Such signs must be removed fifteen (15) days following sale, rental or lease of the real estate involved.

(3) One (1) non-illuminated attached building nameplate per occupancy, not to exceed two (2) square feet in sign area.

(4) One (1) non-illuminated political sign not to exceed sixteen (16) square feet in sign area. Such signs shall not be erected more than forty-five (45) days prior to the election or referendum concerned and shall be removed ten (10) days following such election or referendum. Political signs may be placed only on private property and only with the permission of the property owner.

(5) One (1) subdivision sign per street frontage not to exceed forty-eight (48) square feet in sign area in each location.

(6) One (1) identification sign per entrance to apartment or condominium complex, not to exceed thirty-six (36) square feet in sign area.

(j) *Signs Permitted in Commercial Districts*:

(1) All signs permitted in residential districts as listed in above subsection I.

(2) The total square footage of all signs located on the property, including, but not limited to freestanding, wall, projecting, integrated roof, canopy, under-canopy and directional signs, shall not exceed three (3) square feet in sign area for each lineal foot of property frontage. This frontage shall be calculated using local streets, not the interstate highway.

(3) One (1) freestanding sign within the Interchange/Entryway Zoning District may be installed to a height of forty (40) feet and may be a maximum of three hundred-fifty (350) square feet if the principal purpose of such signs is to address interstate traffic. The sign must be oriented perpendicularly to the interstate so the sign is visible to the interstate traveler. In addition, the property must be adjacent to the Interstate right-of-way.

(4) Freestanding signs which do not address interstate traffic may be installed to a maximum height of twenty-four (24) feet and may have a maximum size of one hundred-fifty (150) square feet.

(5) The setback for the leading edge of freestanding signs shall be a minimum of ten (10) feet.

(6) No sign may be placed or designed so as to simulate or interfere with traffic control devices or official highway directional/informational signs.

(7) One (1) freestanding sign per frontage, including the interstate highway, shall be allowed. Where a street frontage exceeds five hundred (500) feet, one (1) additional freestanding sign may be allowed per five hundred (500) foot increment. Freestanding signs shall have a minimum distance of one hundred-fifty (150) feet between signs. The total square footage of all freestanding signs shall not exceed the total allowable square footage for freestanding signs.

(8) Wall signs shall not exceed twenty (20) percent of the square footage of the wall area upon which they are installed. Electric awning and canopy signs shall not exceed twenty (20) percent of the square footage of the wall area upon which they are installed. The combination of wall signs, electric awning, canopy signs and projecting signs shall not exceed twenty (20) percent of the allowed wall sign area.

(9) Integrated roof signs may be used instead of wall signs. The integrated roof sign size shall not exceed the allowable size for a wall sign. Integrated roof signs shall be constructed so as to conceal all structures and fastenings. The height of the sign shall not exceed the roof to which it is attached.

(10) Projecting signs may be used instead of any wall or freestanding signs provided they do not project beyond the property line and maintain a clearance of ten (10) feet over sidewalk and fourteen (14) feet over any parking lot, driveway or crown of the street, whichever is higher. Projecting sign size shall not exceed the allowable size for a wall sign.

(11) One (1) under-canopy sign for each separate occupancy or separate entrance not to exceed eight (8) square feet in sign area. Under-canopy signs must have a minimum clearance of nine (9) feet from the sidewalk.

(12) Window signs shall not cover more than thirty (30) percent of the window area.

(13) On-site directional signs as required.

(k) *Shopping Center Signs:*

(1) Shopping centers shall be allowed one (1) freestanding sign directory sign per frontage. The sign shall not exceed one hundred-fifty (150) square feet

plus five (5) percent of the one hundred-fifty (150) square feet per tenant. Maximum sign size shall not exceed three hundred-fifty (350) square feet.

(2) Shopping centers signs shall not exceed the maximum allowable freestanding signage.

(3) Shopping center signs cannot be used if the Common Signage Plan is used.

(l) *Common Signage Plan:*

(1) Common Signage Plan. If the owners of two (2) or more contiguous or adjacent (disregarding intervening streets and alleys) lots or the owner of a single lot with more than one building (excluding accessory buildings) or multiple use buildings file with the Planning Director for such lot(s) a Common Signage Plan conforming with the provisions of this section, a twenty-five (25) percent increase in the maximum total sign area shall be allowed for each included lot. This bonus shall be allocated within each lot as the owner(s) elects.

(2) Provisions of Common Signage Plan. The Common Signage Plan shall contain all of the following information:

a. An accurate plot plan of the lot, at such scale as the Planning Director may reasonably require;

b. Location of buildings, parking lots, driveways, clear vision triangles and landscaped areas on such lot;

c. Computation of the maximum total sign area, the maximum area for individual signs, the height of signs and the number of freestanding signs allowed on the lot(s) included in the plan under this chapter; and

d. An accurate indication on the plot plan of the proposed location of each present and future sign of any type, whether requiring a permit or not.

e. Window signs may simply indicate the areas of the windows to be covered by window signs and the general type of the window signs (e.g., paper affixed to window, painted, etched on glass, or some other material hung inside the window) and need not specify the exact dimension or nature of every window sign.

The Common Signage Plan shall also specify standards of consistency among all signs on the lots affected by the Plan with regard to:

a. Color scheme;

b. Letter or graphic style;

c. Lighting;

d. Location of each sign on the building(s);

e. Material; and

f. Sign proportions.

(3) *Limit on Number of Freestanding Signs Under Common Signage Plan.* The Common Signage Plan, for all lots with multiple uses or multiple users, shall limit the number of freestanding signs to a total of one (1) for each street on which the lots included in the plan have frontage and shall provide for shared or common usage of such signs. Where street frontage exceeds five hundred (500) feet, one additional freestanding sign may be allowed per five hundred (500) foot increment.

(4) *Other Provisions of the Common Signage Plan.* The Common Signage Plan may contain other restrictions as the owners of the lots may reasonably determine.

(5) *Consent.* Common Signage Plan shall be signed by all owners or their authorized agents in such form as the Planning Director shall require.

(6) *Procedures.* Common Signage Plan shall be included in any development plan, site plan, planned development or other official plan required by the City or County for the proposed development and shall be processed simultaneously with such other plan.

(7) *Amendment.* Common Signage Plan may be amended by filing a new Common Signage Plan that conforms with all requirements of the chapter then in effect.

(8) *Existing Signs Not Conforming to Common Signage Plan.* If any new or amended Common Signage Plan is filed for a property on which existing signs are located, it shall include a schedule for bringing into conformance, within five (5) years, all signs not conforming to the proposed amended plan or to the requirements of this section effective on the date of submission.

(9) *Binding Effect.* After approval of a Common Signage Plan, no sign shall be erected, placed, painted or maintained, except in conformance with such plan, and such may be enforced in the same way as any provision of this

chapter. In case of any conflict between the provisions of this section and Common Signage Plan, the section shall control.

(10) *Dissolution of Common Signage Plan.* If the signatories of a Common Signage Plan wish to dissolve the Common Signage Plan, written notice must be submitted to the Planning Director. All signs on the property for which the Common Signage Plan was dissolved must bring all signs into conformance with this section within thirty (30) days of the date written notice was submitted to the Planning Director.

(m) *Nonconforming Signs*. Existing signs which do not conform to the specific provisions of this section may be eligible for the designation "legal nonconforming" provided that:

(1) The Planning Director determines such signs are properly maintained and do not in any way endanger the public;

(2) The sign was installed in conformance with a valid permit or variance or complied with all applicable laws on the date of adoption of this section; and

(3) The sign owner registers the sign with the Planning Director within six (6) months of the adoption of this section. If the owner fails to register the nonconforming sign with the Planning Director, the sign then must be brought into compliance with this section within thirty (30) days.

A legal nonconforming sign may lose this designation if:

1. The sign is relocated or replaced; or

2. The structure or size of this sign is altered in any way except toward compliance with this section. This does not refer to change of copy or normal maintenance.

The legal nonconforming sign is subject to all requirements of this section regarding, safety, maintenance, and repair. However, if the sign suffers more than fifty (50) percent damage or deterioration, as based on appraisal, it must be brought into conformance with this section or removed.

(n) *Construction Specifications:*

1. All signs shall be installed in compliance with the Uniform Building Code (UBC) and the National Electric Code (NEC).

2. All signs shall be inspected by the City of Billings Building Division for compliance with all applicable codes. (Including, but not limited to structure, wind load, and electrical hook-up.)

3. All electrical freestanding signs must have underground electrical service to such signs.

## SEC. 27-1010. SPECIAL REVIEW PROCESS.

Special reviews shall follow the procedure as outlined in BMCC Sections 27-1503 (City) and 27-1509 (County).

## SEC. 27-1011. VARIANCES.

Variances from this chapter shall follow the process outlined in BMCC Sections 27-1506 (City) and 27-1511 (County).

(Ord. No. 97-5048, § 8, 12-22-97; Ord. No. 99-5101, § 1, 9-13-99)

## ARTICLE 27-1100. LANDSCAPING

### SEC. 27-1101. PURPOSE.

The purpose of this section is to provide landscaping and performance standards which:

(a) Enhance and promote a unique image for the Billings urban area.

(b) Protect the public health, safety and welfare by:

(1) Increasing parking lot traffic safety by guiding the circulation of cars and people and lowering traffic speeds;

(2) Minimizing noise, air, water and visual pollution;

(3) Screening and buffering incompatible land uses;

(4) Reducing the amount of reflected glare and heat absorbed in and around developments;

(5) Breaking up large expanses of parking lots;

(6) Preserving property values and neighborhood characteristics by lessening the impacts of potentially incompatible uses; and

(7) Providing screening from wind.

(c) Conserve water resources by:

(1) Promoting the use of xeriscaping and drought-tolerant native plantings; and

(2) Promoting the utilization of stormwater detention as an irrigation source.

(d) Ensure that landscaping is an integral part of the site design and development process.

### SEC. 27-1102. SCOPE.

Development which satisfies one of the following criteria shall be exempt from this section:

(a) Single or two-family developments where each unit is located on an individual lot;

(b) Submitted or approved plans, building permits and/or development existing prior to the effective date of this chapter shall comply with the regulations which were in effect at the time of approval; or

(c) Development located within one of the following zoning classifications:

(1) Central Business District (C.B.D.) Zone

(2) Entryway Light Commercial (E.L.C.) Zone

(3) Entryway General Commercial (E.G.C.) Zone

(4) Entryway Mixed Use (E.M.U.) Zone

(5) Heavy Industrial (H.I.) Zone

(6) Medical Corridor Permit Zoning District

(7) Planned Development (P.D.) Zone

(8) South 27th Street Corridor Zoning District

The provisions of this section shall apply to development which meets one of the following and is not exempt under above subsection C:

(a) All new development which has not applied for a building permit before the effective date of this chapter; or

(b) Existing development in which the gross floor area (GFA) or the number of parking stalls is increased by twenty-five (25) percent.

## SEC. 27-1103. ADMINISTRATIVE RELIEF.

Administrative Relief is provided to add flexibility in the application of the landscaping regulations in this section when a standard is inapplicable or inappropriate to a specific use or design proposal. However, the granting of Administrative Relief should not always mean that a requirement is reduced without compensation. For example, the granting of a reduced bufferyard depth should be compensated by the planting of additional trees, shrubs or other plants.

A written request for Administrative Relief shall be submitted to the Planning Director or his/her designee either before or in conjunction with the building permit review process. The written request shall include a justification in terms of the findings necessary to grant Administrative Relief. The written request shall close with a section for the Planning Department's use which will include a block for the decision of approval/denial, the Planning Director or his/her designee's signature, and decision date. The written request with decision shall be attached to the plan or retained in the applicable file, as appropriate. An example of this written request shall be available from the Planning Department.

The Planning Director or his/her designee must make all of the following findings in order to grant Administrative Relief:

(a) The strict application of the regulation in question is unreasonable given the development proposal or the measures proposed by the applicant or that the property has extraordinary or exceptional physical conditions that do not generally exist in nearby properties in the same general area and such conditions will not allow a reasonable use of the property in its current zone in absence of relief;

(b) The intent of the landscaping section and the specific regulation in question is preserved; and

(c) The granting of the Administrative Relief will not result in an adverse impact upon surrounding properties.

The Planning Director or his/her designee shall render a decision on the request within five (5) working days of receipt of the request and all required information. An appeal of the Planning Director's decision may be made to the Board of Adjustment with jurisdiction over the property, within ten (10) days after the decision. At this time, the appeal will be put on the agenda for the next Board of Adjustment meeting which allows for the required public notice.

***Policies***

(1) The Planning Department recognizes that the specific landscape requirements in this section cannot and do not anticipate all possible landscape situations. In addition, the Planning Department recognizes that there may be landscape proposals which conform to the purpose, intent and objectives of the landscape regulations, but were not anticipated in the specific regulations. Therefore, the Planning Department may grant Administrative Relief in the event of these situations and proposals.

(2) The Planning Department recognizes that a proposed development of a relatively small commercial or industrial lot which was created prior to the current landscape requirements may present unusual difficulties in complying with the current requirements.

The Planning Department shall attempt to balance the reasonable use of such lot with the provision of required landscaping. This balance will be affected by the site's characteristics, as well as, the proposed development plan.

The Planning Department also recognizes that to allow reasonable development there should be an upper limit to the amount of a site that is required to be landscaped. As a general guideline for relatively small commercial or industrial lots (such as one (1) acre or less), the requirements should not exceed twenty-five (25) percent of a site.

The reasonable development of a site may require the granting of Administrative Relief to some of the requirements. Although all of the categories of landscape requirements are considered important, the Planning Department generally assigns the following priorities for compliance with the landscape requirements:

First, adjacent residential uses should be buffered,

Second, an attractive appearance of the project should be provided along adjacent streets by landscaped setbacks and trees,

Third, the parking areas and building elevations which form major public views of the project should be visually softened and enhanced by trees and other plantings.

Compliance with the requirements, such as the third priority above, should not be "forced" into a site design. For both visual effect and ease of maintenance, relatively few, but larger landscaped areas, which are integrated with the other elements of the site design, are generally encouraged. In addition, relatively numerous and smaller landscaped areas, which are not integrated with the other elements of the site design, are generally discouraged.[1]

## SEC. 27-1104. DEFINITIONS.

*Berm:* An earthen mound designed to provide visual interest, screen undesirable views and/or decrease noise levels.

*Bufferyard:* A combination of physical space and vertical elements, such as plants, berms, fences, or walls, the purpose of which is to separate and screen uses from one another.

*Caliper:* A standard for trunk measurement of nursery stock that is measured from a specified distance above the ground.

*Commercial Uses:* Land uses which are allowed by right or through the special review process in the Residential Professional, Neighborhood Commercial, Community Commercial, or Highway Commercial zones, as listed in BMCC Section 27-306 of the Zoning Regulations.

*Coniferous:* A plant with foliage that persists and remains green year-round.

*Deciduous:* A plant with foliage that is shed annually.

*Development:* The division of a parcel of land into two (2) or more parcels; the construction, reconstruction, conversion, structural alteration, relocation or enlargement of any structure or any use or extension of the use of the land.

*Dripline:* A vertical line extending from the outermost edge of the tree canopy or shrub branch to the ground.

*Drought Avoidance:* The ability of a plant to withstand drought without showing signs of stress.

*Drought Tolerance:* The ability of a plant to withstand drought without dying.

*Industrial Uses:* Uses of land which are allowed by right or through the special review process only in the Controlled or Heavy Industrial zoning classifications, as listed in BMCC Section 27-306, of the Zoning Regulations.

[1] (Ord. No. 97-5048, § 9, 12-22-97)

*Landscaping Material, Inorganic:* Nonliving material such as river rock, stone, bark chips, mulch, flower tubs, fountains, outdoor plazas or other environmental amenities as approved by the Zoning Coordinator.

*Landscaping Material, Organic:* Living vegetative material such as trees, shrubs, vines, turf, and flower beds.

*Perimeter Landscaping:* The landscaping located appurtenant to the outer property lines, exclusive of the property line(s) which abut a public street right-of-way.

*Permanent Tree Protection Devices:* Structural measures, such as retaining walls or aeration devices, that are designed to protect the tree and its root system throughout its lifetime.

*Public Uses:* Uses of land which are considered public in nature such as parks and recreation areas, public or private schools, colleges, playgrounds, day care centers or churches, or other public buildings.

*Shrub:* A woody plant that usually remains low and produces shoots or stems from the base and is not usually tree-like or single stemmed.

*Vegetation, Native:* Plant life which is indigenous to a geographic region.

*Vehicular Use Area:* The area of a site devoted to vehicular parking and driving isles.

*Vine:* A woody plant whose stem requires support and climbs by tendrils or twining or creeps along the ground.

*Wall or Fence:* An artificially constructed barrier of posts connected by boards, rails, or panels, erected for the purpose of enclosing space to separate parcels of land, or to screen or enclose areas of land. This term also includes a masonry wall.

*Xeriscape:* Landscape methods which conserve water through the use of drought-tolerant plants and planting techniques.

## SEC. 27-1105. REQUIRED BUFFERYARDS.

(a) For developments with less than 130,000 square feet in lot area, the following standards shall apply:

(1) The development shall provide a minimum of ten (10) percent of the lot area for landscaping, less the square footage of the building footprint. In addition, fifty (50) percent of this required landscaping shall be placed so that it abuts adjoining public right-of-way, excluding alleys.

(2) A six (6) foot high sight-obscuring fence or wall shall be provided on the property line where commercial or industrial uses are adjacent or across an alley from residential uses. A continuous hedge may be substituted for the

required fence or wall, as long as it has a minimum height at installation of three (3) feet and maintains such size or reaches six (6) feet or more at maturity.

(b) For developments with 130,000 square feet or more in lot area, the following standards shall apply:

(1) *Street Frontage Landscaping* The area along any property line which abuts a public street right-of-way must be landscaped using one (1) or a combination of two (2) or more of the following four (4) options which the developer may choose.

Option 1: 20' minimum bufferyard width
1 tree per 40 linear feet of frontage

Option 2: 10' minimum bufferyard width
2 trees per 40 linear feet of frontage

Option 3: Landscaped berm with 2' minimum average height
1' rise: 4' run maximum slope
No minimum or maximum berm width
1 tree per 40 linear feet of frontage

Option 4: 5' minimum bufferyard
1 tree per 40 linear feet of frontage
30" high decorative or non-decorative wall located appurtenant to the parking area. A non-decorative wall shall be covered with vines on the street side of the wall.

Placement and landscaping design shall be at the discretion of the developer, including the placement of the required trees within the required bufferyard. Bufferyard depth is measured from the property line inward. Any buffer area which overlaps another buffer area shall be subtracted from the total to avoid double counting.

(2) *Perimeter Landscaping* The exterior boundaries of the lot which do not abut a public street right-of-way shall meet the bufferyard requirements shown below, depending upon the adjacent land use. If the adjacent land use is a vacant building or ground, then the zoning shall be used in place of the land use.

| | **Residential Uses** | **Commercial Uses** | **Industrial Uses** | **Public Uses** |
|---|---|---|---|---|
| **Residential Uses** | A | C | D | A |
| **Commercial Uses** | C | A | B | B |
| **Industrial Uses** | D | B | A | D |
| **Public Uses** | A | B | D | A |

Note: If a use does not conform with one of the above categories, the Zoning Coordinator shall determine which category best matches the use.

Bufferyard Classification Requirements:

Bufferyard A: 5' minimum bufferyard
1 tree per 40 linear feet

Bufferyard B: 10' minimum bufferyard
2 trees per 40 linear feet

Bufferyard C: 15' minimum bufferyard
3 trees per 40 linear feet
6' sight obscuring fence or wall located on the property line*

Bufferyard D: 15' minimum bufferyard
4 trees per 40 linear feet
6' sight obscuring fence or wall located on the property line*

*A continuous hedge may be substituted for the required fence or wall in Bufferyards C and D, as long as it has a minimum height at installation of three (3) feet and maintains such size or reaches six (6) feet or more at maturity.

Placement and landscaping design shall be at the discretion of the developer, including the placement of the required trees within the required bufferyard. Bufferyard depth is measured from the property line inward. Any buffer area which overlaps another buffer area shall be subtracted from the total to avoid double counting.

(c) *Bufferyard Standards for All Developments* All required bufferyards must contain a minimum of seventy-five (75) percent organic landscaping material, with a maximum of twenty-five (25) percent nonliving landscaping materials.

All required bufferyards shall be irrigated, maintained and kept free of weeds, debris and litter.

The use of coniferous trees is encouraged in the perimeter bufferyards.

## SEC. 27-1106. OFF-STREET PARKING LOT LANDSCAPING.

The following requirements shall be met for off-street parking lots which are not exempt from this chapter or for developments whose lot area is 130,000 square feet or more.

(a) There shall be one (1) tree provided for every ten (10) parking stalls.

(b) Depending on the number of spaces, the following square feet of landscaped area must be placed in the vehicle use areas. The required landscaped area

shall be "stepped" up to the number of stalls which will be provided. For example, a parking lot with 52 stalls shall provide no square feet for the first 9 parking stalls, stalls 10-25 shall provide 15 square feet per stall, stalls 26-50 shall provide 18 square feet per stall, and stalls 51-52 shall provide 25 square feet per stall.

| Number of Stalls | Required Landscaped Area |
|---|---|
| 0-9 | None required |
| 10-25 | 15 sq. ft. per stall |
| 26-50 | 18 sq. ft. per stall |
| 51-99 | 25 sq. ft. per stall |
| 100 or more | 35 sq. ft. per stall |

(c) No parking stall shall be more than one hundred and twenty (120) feet from a required landscaped area.

(d) The developer is encouraged to utilize landscaped terminal islands at the end of parking rows and/or divider strips between parking rows to help disperse the required landscaping throughout the entire parking lot.

(e) Parking stalls that abut a required bufferyard may increase the width of this bufferyard a minimum of five (5) feet and count this toward the required off-street parking landscaped area.

(f) Landscaped areas within parking lots or the along perimeter of the property must be protected from vehicular traffic through the use of continuous concrete curbs, extruded asphalt or other approved permanent barriers.

(g) Clear vision areas within the off-street parking area must be established at intersections by maintaining a maximum height for shrubs and ground cover of thirty (30) inches and tree branches must be trimmed up eight (8) feet from the ground.

(h) The minimum width or length of any landscaped area shall be five (5) feet, however the recommended minimum size is eight (8) feet. All of the required landscaped areas must contain a minimum of seventy-five (75) percent living landscaping material, with a maximum of twenty-five (25) percent nonliving landscaping material. Approved sidewalks are not counted toward this percentage.

(i) Parking lots containing between 200-749 parking stalls are encouraged to divide the lot into two or more lots, separated by a landscaped strip which may be counted toward the required off-street parking landscaping area. Parking lots with more than 750 stalls are required to divide the lot into at least two parking lots with a landscaped strip separating them. The minimum width of these landscaping strips shall be ten (10) feet.

(j) A landscaped divider strip that separates either parking rows or parking lots shall be allowed to count a sidewalk located within this divider strip toward a part of the required off-street parking lot landscaping. The intent of this sidewalk is to help facilitate safe pedestrian movement. This sidewalk must meet the following criteria if it is to be counted toward the required landscaping:

(1) The sidewalk has a five (5) foot wide walking path and shall add two (2) feet for vehicle overhang, if the sidewalk abuts a parking stall.

(2) The sidewalk runs the entire length of the divider strip.

(3) The sidewalk is bordered on at least one side by landscaping, of which the sidewalk cannot account for more than fifty (50) percent of the area of the divider strip.

(k) Deciduous trees are encouraged within the parking lot.

## SEC. 27-1107. SUPPLEMENTAL STANDARDS.

All landscaped areas must comply with the clear vision standards for intersections as established in BMCC Section 27-615 of the Zoning Regulations. These sections regulate the allowed height and placement of fences, walls, signs, landscaping materials, in addition to other objects.

Chain link or wire fencing is prohibited where a sight obscuring fence is required in a bufferyard.

All landscaping shall be located so that it does not interfere with utilities, easements or fire hydrants.

Where appropriate, the use of porous pavement and/or specially designed brick or block should be considered to increase on-site water retention for plant material and groundwater supplies and to reduce problems associated with runoff.

All solid waste storage facilities shall be enclosed on three (3) sides by a sight obscuring fence or wall and by a sight obscuring gate on the remaining side. This requirement shall exclude up to two (2) recycling centers for general public access which are set up in the parking lot of commercially zoned properties.

Any permitted outside storage of merchandise shall be enclosed by a sight obscuring fence or wall. Exceptions to this requirement are temporary promotional displays, vehicle sales lots and plant materials that are located appurtenant to an approved building.

## SEC. 27-1108. LANDSCAPING PLAN REQUIREMENTS.

A landscaping plan must be approved by the Planning Director or his/her designee before the issuance of a building permit. The developer is encouraged to work with a local landscape architect, nurseryman or design professional to make the landscaping an integral part of the overall site design by using site-specific materials which are:

(a) Appropriate to the conditions in which they are planted;

(b) Have noninvasive growth habits;

(c) Encourage low maintenance, high quality design; and

(d) Be otherwise consistent with the intent of this chapter.

A list of recommended plants can be obtained from the Planning Department or the Montana State University Extension Service.

The landscaping plan should contain the following elements:

(a) Scale: ¼"=1'0" to 1"=40'

(b) Property lines, easements and public rights-of-way, including clear vision triangles.

(c) Buildings or structures - both new and existing.

(d) Drive approaches, parking spaces, light standards, circulation and pedestrian walkways.

(e) Landscaping materials:

(1) Location and spacing of proposed plant materials.

(2) Location of existing trees or landscaping to be preserved or eliminated.

(3) Types and location of new vegetation identified by botanical and common names and listed on a plant schedule.

(4) Size of materials, in diameter and height at installation and maturity.

(5) Quantity of each planting materials to be used.

(6) Types and location of inorganic landscaping material.

(f) Location of walls, fences and refuse storage areas.

(g) Methods of protecting the landscaped areas.

(h) Proposed treatment of all ground surfaces (concrete or asphalt paving, pavers, turf or gravel).

## SEC. 27-1109. LANDSCAPING MATERIAL STANDARDS.

(a) Plants shall conform to the measurements specified in the plant schedule submitted with the landscaping plan.

(b) Landscaping materials shall comply with the following minimum size standards at the time of planting, with caliper measurements taken six (6) inches above grade.

(1) Minimum height for shade trees shall be eight (8) feet.

(2) Minimum size for shade trees shall be a one and one-half (1") inch caliper.

(3) Minimum size for evergreen trees shall be five (5) feet in height.

(4) Minimum size for shrubs shall be one (1) gallon container for low and medium shrubs and five (5) gallon container for tall shrubs.

(c) It is recommended that a professional horticulturist, nurseryman or design professional be consulted to determine the proper time to move and install all plant materials, so that stress to the plants will be minimized.

## SEC. 27-1110. INSTALLATION AND MAINTENANCE.

A performance bond or letter of credit for one hundred fifty (150) percent of the landscaping materials and labor costs shall be posted with the Planning Department to ensure the placement of the required landscaping. The property shall be inspected by the Planning Director or his/her designee to make sure that the required landscaping has been planted before the Certificate of Occupancy is signed off. The planting of the required landscaping may be delayed until the next suitable planting season with written approval from the Planning Director or his/her designee.

The responsibility for the maintenance of the landscaping shall lie with the property owner, his/her successor and/or their agents. All landscaping elements shall be permanently maintained in good growing condition and, whenever necessary, replaced with new plant materials to ensure continued compliance with this section. In addition, all walls and fences shall also be maintained in good condition and, when necessary, be repaired or replaced.

## SEC. 27-1111. ADMINISTRATION AND ENFORCEMENT.

The administration and enforcement of this article shall reside with the Zoning Coordinator as stated in BMCC Sections 27-1602 and 27-1603.

***Editor's note:** Ord. No. 97-5048, § 9, adopted Dec. 22, 1997, repealed former Art. 27-1100, §§ 27-1101--27-1105, in its entirety and enacted new provisions as herein set out. Former Art. 27-1100 pertained to administration and enforcement. See the Code Comparative Table towards the end of this volume for a listing of ordinances amending former §§ 27-1101--27-1105.

## ARTICLE 27-1200. OFFSTREET PARKING AND LOADING STANDARDS (COUNTY ONLY)*

### SEC. 27-1201. INTENT.

The intent of this chapter is to reduce traffic congestion and the need for parking on public streets and hazards caused thereby; to provide off-street parking and off-street loading berths adequate for each type of development in terms of both quantity and location. This chapter shall only apply to property located outside the limits of the City of Billings but within the Unincorporated Jurisdictional Area.

### SEC. 27-1202. DEFINITIONS.

For the purposes of this chapter, certain words and phrases are defined and shall be construed as herein set forth in this section:

(a) **NUMBER OF EMPLOYEES**: The largest number of employees who are on the premises during the peak working shift, as determined by Zoning Coordinator.

(b) **PARKING LOT**: A structure or an area other than a public street or alley, together with ways of ingress, egress, isles, and maneuvering and backing areas, designed or used for the temporary parking of motor vehicles serving a use permitted in the district in which such parcel is situated, and available for public use whether free, for compensation, or an accommodation for customers or clients.

(c) **OFF-STREET PARKING SPACE**: An area, other than a public street, alleyway or other public property (and exclusive of off-street loading spaces) permanently reserved or set aside for the parking of one (1) motor vehicle.

### SEC. 27-1203. PARKING REQUIREMENTS - GENERAL.

There shall be provided at the time of erection of any building or structure or at the time of any change in occupancy of any building or structure minimum off-street parking accommodations meeting the provisions of this chapter.

### SEC. 27-1204. EXPANSION AND ENLARGEMENT.

Whenever any building is enlarged in height or in ground coverage, off-street parking shall be provided for the expansion or enlargement in accordance with the requirements of this chapter, provided, however, that no parking space be provided in the case of enlargement or expansion is less than ten (10) percent of the parking spaces required for the enlarged facility as specified in this chapter. Nothing in this provision shall be construed to require off-street parking spaces for the portion of such building existing on November 6, 1973.

### SEC. 27-1205. NONCONFORMING USES.

Nothing in this chapter shall be deemed to prevent the voluntary establishment of off-street parking or loading facilities to serve any existing use of land or buildings even

though nonconforming, provided that all regulations herein governing the location, design, size and space standards and operation of such facilities are adhered to.

### SEC. 27-1206. COMBINED OR MIXED OCCUPANCIES.

In the case of mixed uses, the total requirements for the various uses shall be computed separately. The total requirements are to be the sum of the area computed. Off-street parking facilities for one (1) use shall not be considered as a substitute for joint use.

### SEC. 27-1207. USE NOT SPECIFIED.

In the case of a use not specifically mentioned in this chapter, the requirements for off-street parking facilities shall be determined by the Zoning Coordinator. Such determination shall be based upon the requirements for the most closely comparable use listed.

### SEC. 27-1208. REDUCTION IN SPACES.

Off-street parking spaces existing and actually being used for the parking of automobiles or other motor vehicles in connection with the use of an existing building shall not be reduced in number or size, during the entire life of such building or land use, below that which would be required for a new building or use of a similar type.

### SEC. 27-1209. FRACTIONAL SPACES.

If the number of off-street parking spaces hereinafter required contains a fraction, such number shall be rounded up to the next highest whole number.

### SEC. 27-1210. JOINT USE.

The Zoning Coordinator may authorize the joint use or lease of off-street parking facilities for the following uses or activities under the conditions specified:

(a) Up to fifty (50) percent of the required off-street parking for primarily "nighttime" uses such as theaters, bowling alleys, bars or restaurants and related uses may be supplied by the parking requirements for primarily "daytime" uses such as banks, offices, retail uses, personal service establishments, clothing, food, furniture, manufacturing or wholesale and related uses.

(b) Subsection A of this Section may be reversed so that parking for "nighttime" uses may be used for "daytime" uses.

(c) Up to fifty (50) percent of the parking facilities required by this chapter for churches or auditoriums may be supplied by the parking facilities provided for primarily "daytime" uses.

(d) Conditions required for joint use or lease. The building or use for which application is being made to utilize the off-street parking facilities provided by another building or use, shall be located within five hundred (500) feet of such parking facilities, in addition to which:

1. The application shall show that there is no substantial conflict in the principal operating hours of the two (2) buildings or uses for which a joint use of off-street parking facilities is proposed.

2. The applicant shall present to the Zoning Coordinator a legal agreement (lease) executed by the parties concerned for joint use or lease of off-street parking facilities. The lease must be for a minimum of ten (10) years and contain a notification requirement whereby the Planning Department will be informed in writing of any termination or complication experienced during the term of the lease. The legal document shall be recorded with the County Clerk and Recorder.

## SEC. 27-1211. DESIGN STANDARDS - LOCATION.

(a) Off-street parking area(s) as required by this chapter shall be located as specified herein:

(1) Single- and two-family dwellings: On the same building site with the dwelling they are required to serve.

(2) Multi-family dwellings, townhouses, retirement homes, lodging, boarding and bed and breakfast houses: Within one hundred (100) feet of the use to be served.

(3) Hospitals, sanitariums, convalescent nursing homes, rest homes, homes for the aged and asylums: Within six hundred (600) feet for employees and three hundred (300) feet for visitors.

(4) Other uses not specified above: Within four hundred (400) feet of the use they are required to serve.

(b) Where a distance is specified, such distance shall be measured in walking distance measured from the nearest point of the parking facility to the nearest point of the lot such facility is required to serve. The off-street parking shall not be located across a major arterial street except when both properties are contiguous to an intersection with traffic control lights. Off-street parking should not be located across a minor arterial or collector street from the business or residence.

(c) Off-street parking areas must be accessible by a public street or alley, and shall be owned or leased by the owner or lessee of the building or use being served by such parking. Such parking lot shall be maintained as a parking lot so long as the building and/or use served is in operation or until another suitable parking area is established for such building or use.

(d) Customer access via an alley to any commercial use on a lot which is adjacent to an alley and which abuts a Residential zone shall not be permitted over that

alley. Employee parking may be allowed in the alley if the alley is paved and if the parking will not conflict with the adjacent residential uses.

(e) Required parking spaces shall be located so as to preclude backing maneuvers onto any public right-of-way from any use, with the exception of single- and two-family dwellings, as defined in this Resolution/Ordinance. Required parking spaces shall not be located in any required front or side yard, except for detached single-family dwellings, townhouses and manufactured homes. See BMCC Section 27-602 for Arterial Setbacks on required parking.

(f) A Drive Approach Permit must be obtained from the County Public Works Department prior to constructing any access.

### SEC. 27-1212. DESIGN STANDARDS - OFF-STREET LOADING SPACES.

(a) Off-street loading berths shall be provided on the same lot as the use it serves and shall not be located within the required front setback.

(b) No loading berths shall be located closer than fifty (50) feet to a residentially zoned property, except when the berth area is enclosed, or screened by a six (6) foot minimum high wall or solid fence and the loading berth shall also meet the required setbacks from the adjacent residentially zoned property.

(c) Each loading berth shall be designed with access to a public street or alley and so designed as not to interfere with normal traffic movement. No loading berth shall be located in the alley if it is adjacent to a Residential zone.

(d) Each berth shall be not less than twenty (20) feet in width, twenty-five (25) feet in length, and fourteen (14) feet in height.

(e) Loading berths shall not be considered as off-street parking spaces.

(f) All or part of the required loading berths may be within buildings.

(g) Off-Street Loading - Retail and Commercial. In any district, any building or part thereof having a gross floor area of ten thousand (10,000) square feet or more which is to be occupied by a use requiring the receipt or distribution by vehicles of material or merchandise, there shall be provided and maintained on the same lot with such building at least one (1) off-street loading space, plus one (1) additional loading space for each twenty thousand (20,000) feet or fraction thereof of gross floor area. Such loading space shall be located so as to preclude backing maneuvers on the public right-of-way.

(h) Off-Street Loading - Warehouse and Wholesale. Off-street loading space for warehouse, wholesale shipping and similar facilities will be determined by the Zoning Coordinator or County Public Works Director. Such loading space shall be located so as to preclude backing maneuvers on the public right-of-way.

### SEC. 27-1213. DESIGN STANDARDS - SIZE OF PARKING SPACES AND AISLES.

(a) The minimum width of two-way aisles shall be twenty-six (26) feet. Off-street parking spaces parallel with a wall, fence, or curb shall be a minimum of twenty-two

(22) feet in length. Angle parking with one ingress/egress shall be prohibited if there is only one isle of parking.

(b) Off-street parking spaces shall have a minimum dimension of nine (9) feet in width. All other minimum dimensions will be based upon standards on file in the County Public Works Director's office.

### SEC. 27-1214. HANDICAPPED PARKING REQUIREMENTS.

Parking spaces shall be provided for the handicapped and shall be clearly signed or marked with a stenciled notation on the pavement designating such use. Such parking spaces shall be located closest to the handicapped accessible entrance with an accessible route provided to that entrance and approved handicapped parking signs shall be posted. The size and number of handicapped parking stalls shall comply with the current Americans with Disabilities Act (ADA) policies and rules.

### SEC. 27-1215. CONSTRUCTION SPECIFICATIONS.

(a) Surfacing.

(1) Every off-street parking, loading and driveway area shall be paved with asphaltic or portland cement concrete, except for single-family development on individual lots.

(2) Surfacing shall be designed by accepted engineering methods, subject to the approval of the County Public Works Director.

(b) Drainage. All off-street parking and loading areas shall be graded and drained so as to adequately dispose of all surface water generated by that impervious surface. Surface water shall not be drained across public sidewalks or alleys. Drainage plans for uses requiring more than ten (10) parking spaces shall be submitted to and approved by the County Public Works Director prior to the issuance of a building permit.

(c) Walkways. Walkways a minimum of five (5) feet in width shall be provided between any building and adjacent parking lot. Where sidewalk curbs serve as wheel stops, an additional two (2) feet of sidewalk width is required.

(d) Lighting. Lighting used to illuminate a parking area shall be arranged in such a manner as to not be a hazard to passing motorists or constitute a nuisance of any kind. Where said parking area is within one hundred and fifty (150) feet of any property zoned Residential by this Resolution/Ordinance and where the parking area is directly visible by the residents within one hundred and fifty (150) feet, illuminating devices shall be shaded in a manner as to direct light away from the residential property.

(e) Wheel Stops. Wheel stops shall be installed at least thirty (30) inches from all adjacent sidewalks, fences and walls. Such stops shall be either a concrete piece at least sixty (60) inches long and five (5) inches high and affixed securely to the parking surface, or a continuous concrete curb. This requirement may be modified, provided other design features will be equally effective in prohibiting a vehicle from obstructing a sidewalk or

making contact with a walk, fence or landscaped area, and which will promote safe pedestrian access.

(f) Traffic Control Devices. Parking spaces shall be designated by pavement markings. All traffic control devices such as pavement markings, signs, rails, curbs and other similar development proposals shall be installed and completed as shown on the approved plans.

(g) Maintenance. Maintenance of all areas provided for off-street parking shall include repair and maintenance of drain and repair of traffic control devices, signs, lights, standards, surfacing materials, curbs and sidewalks.

(h) Accesses. The accesses to parking lots shall be approved by the County Public Works Department or the Montana Department of Transportation, depending upon jurisdiction.

(i) Improvement Schedule. All parking area improvements to include surfacing, drainage, walkways, lighting, landscaping, screening, traffic control, etc., shall be installed before occupancy of the building or use to be served by such parking. Where parking area improvements will not be completed before occupancy of the building, a performance bond or an irrevocable letter of credit will be accepted for the completion of the required improvements. The performance bond or letter of credit shall be equal to one and one half (1 1/2") times the cost of the parking area improvements to be completed. A cost estimate for improvements not installed at the time of occupancy shall be presented to the Building Official for approval. Performance bonds or letters of credit will not be released until all required improvements shown on the approved plan are installed and accepted. Foreclosure proceedings shall be brought against the performance bond or irrevocable letter of credit if the required improvements have not been completed within twelve (12) months of the posting of the bond or letter of credit.

## SEC. 27-1216. REQUIRED PARKING AND LOADING SPACES FOR SPECIFIC USES.

Required parking spaces shall be in conformance with the following table and where alternative standards are indicated, the greater requirement applies in conflicting computation. For uses not listed below, see BMCC section 27-1207.

| Specific use | Required parking and loading spaces |
|---|---|
| Residential single-family or duplex dwelling | 2 parking spaces per dwelling unit |
| Residential multi-family dwelling | 1 parking space per one (1) bedroom dwelling unit |
| | 1 1/2 parking space per two (2) or more bedroom dwelling unit |
| Fraternity and sorority | 1 parking space per two (2) sleeping rooms or 1 parking space per three (3) beds, whichever is greater |
| Retirement homes and housing projects for the elderly which have received a declaratory ruling from the Montana human rights commission allowing sale or lease of the units exclusively to persons sixty (60) years of age or older* | 1--6 dwelling unit(s) require 0.5 parking space per dwelling unit |
| | 7--18 dwelling units require 0.33 parking space per dwelling unit |

| | |
|---|---|
| | Over 18 dwelling units require 0.25 parking space per dwelling unit, with a minimum of 5 parking spaces |
| | * Conversion to apartments will require the building to meet the residential multi-family dwelling parking requirements |
| Boarding, lodging, bed and breakfast houses, and similar uses | 1 parking space per dwelling or lodging unit |
| Motels / hotels | 1 parking space per sleeping room plus 1/2 parking space per employee per shift |
| Hospitals and institutions | With less than 100 beds based upon state licensed bed count: |
| | 1 1/2 parking spaces for each one thousand (1,000) square feet of total area or 1.2 spaces per bed |
| | With over 100 beds based upon state licensed bed count: 1.2 parking spaces per bed |
| Convalescent nursing homes and retirement homes | 1 1/2 parking spaces per one thousand (1,000) square feet |
| Day care, nursery and preschools | 1 parking space per employee and 1 parking space per six (6) children |
| Schools: elementary and junior high (public or private) | 5 parking spaces plus 1 per classroom with minimum auditorium requirements |
| Schools: high school, college, vocational and trade (public or private) | 1 parking space per employee and 1 parking space per five (5) students |
| Banks, business and professional offices | 1 parking space per three hundred (300) square feet of floor area |
| Medical and dental offices or clinics | 1 parking space per two hundred (200) square feet of floor area |
| Libraries and museums | 1 parking space per five hundred (500) square feet of floor area |
| Theaters, auditoriums, stadiums, sports arenas, and other similar open assemblies | 1 parking space per four (4) fixed seats or 1 parking space per one hundred (100) square feet of assembly space without fixed seats |
| Skating rinks, dance halls, and recreation establishments | 1 parking space per two hundred (200) square feet of floor area |
| Bowling alleys | 6 parking spaces per alley |
| Churches, auditoriums, bingo parlors, and other similar places of assembly | 1 parking space per four (4) fixed seats or 1 parking space per one hundred (100) linear inches of pew or 1 parking space per sixty-five (65) square feet of floor area used for assembly purposes |
| Mortuaries and funeral homes | 1 parking space per four (4) seats |
| Private clubs and lodges | 1 parking space per two hundred (200) square feet of floor area |
| Restaurants and bars | 1 parking space per one hundred (100) square feet of floor area |
| Restaurants, with drive-in service | 1 parking space per eighty (80) square feet of floor area, with 10 parking spaces minimum |
| Retail stores - less than five thousand (5,000) square feet | 1 parking space per two hundred (200) square feet of floor area |
| Retail stores - greater than five thousand (5,000) square feet | 25 parking spaces plus 1 parking space per three hundred (300) square feet in excess of five thousand (5,000) square feet |
| Furniture, appliance, household, and equipment sales | 1 parking space per six hundred (600) square feet |
| Open sales area, trailer sales and rental, manufactured home sales, and garages | 1 parking space per one thousand five hundred (1,500) square feet of sales area |

| | |
|---|---|
| Service stations, automobile repair and services | 1 parking space per eighty (80) square feet of gross floor area, with 10 spaces minimum (pump lanes not counted as parking spaces) |
| Convenience store/gas combination | 1 parking space per eighty (80) square feet of gross floor area, with 10 spaces minimum (pump lanes not counted as parking spaces) |
| Motor vehicle and boat showrooms, machinery sales and service, plumbing, heating and ventilating, upholstery, building material supplies, sales and service | 1 parking space per one thousand (1,000) square feet plus 1 parking space per employee |
| Manufacturing uses, research, testing or repair of materials or commodities and processing, assembling, all industries | 1 parking space per two (2) employees on maximum shift, but not less than 1 parking space per eight hundred (800) square feet of gross floor area |
| Wholesale establishments | 5 parking spaces for the first one thousand (1,000) square feet of area and 1 additional space for each one thousand (1,000) square feet or 0.6 spaces per employee |
| Warehousing or storage buildings, freight terminals | 10 spaces for the first twenty thousand (20,000) square feet of area and 1 additional space for each additional ten thousand (10,000) square feet or 0.6 spaces per employee |

(Ord. No. 97-5048, § 11, 12-22-97)

## ARTICLE 27-1300. PLANNED DEVELOPMENTS

### SEC. 27-1301. INTENT STATEMENT.

The intent of this zoning district is to provide flexible land use and design regulations through the creation of individualized planned developments (pd). It is further the intent to encourage unique development or re-development through a flexible, timely and efficient process. Developments which utilize innovative, progressive planning and site design techniques and methods to allow a mixture of land uses, densities, setbacks and building heights will be encouraged. In addition, this zone is intended to encourage the preservation and enhancement of the physical characteristics of the site.

It is further intended that each PD zone will be a separate zone, each having differing design criteria to provide for the uses and improvements based on its particular site specific situation.

(Ord. No. 97-5048, § 11, 12-22-97)

### SEC. 27-1302. OBJECTIVES.

The planned development (PD) zoning district is intended to include and promote consideration of the following:

(a) To permit the development or enlargement of planned industrial, commercial, residential or mixed use development zones, while protecting the character and quality of adjacent uses.

(b) To permit clusters of multiple family developments in appropriate locations within single family residential or commercial zones.

(c) To permit flexibility in design and use of an individually owned property or a group of separately owned properties to allow for economy, convenience and amenity in development.

(d) Preserve, enhance and retain the existing natural environmental qualities in the landscape such as topographic variation, views, water areas and native vegetation.

(e) Ensure adequate provision of public services such as water, sewer, public safety, public parks, open space, storm water control and vehicular and pedestrian circulation.

(f) Encourage patterns of development which decrease automobile travel and encourage trip consolidation and promotes the use of public transit, bicycles and walking as effective modes of transportation, thereby reducing traffic congestion and degradation of the existing air quality.

(Ord. No. 97-5048, § 11, 12-22-97)

Editor's note: Ord. No. 97-5048, § 11, adopted Dec. 22, 1997, repealed former Art. 27-1300, §§ 27-1301--27-1311 in its entirety and enacted new provisions as herein set out. Former Art. 27-1300, §§ 27-1301--27-1311, pertained to interchange/entryway zoning districts.

### SEC. 27-1303. PD ZONE GUIDELINES.

A PD zone is intended to replace the previous zoning classification of the subject property. Areas rezoned in accordance with this chapter shall be designated with a "PD-_" preceding a numerical designation (example: PD-1) and each new PD district shall be added as an amendment to the zoning regulations.

The PD zoning district is unique among the zoning districts in that it allows zoning and/or site development standards to be "customized" to fit its particular site and/or development situation. With due consideration of public safety, the Governing Body can approve a PD that permits greater or lesser standards in such areas as density, use, bulk, height, parking, signage, traffic circulation, landscaping, lot sizes or other elements. This may also include permitting the development of amenities such as tennis centers, swimming centers, and other recreational activities such as an equestrian center within the city limits, provided that such an amenity is an integral part of the overall development scheme of the PD. However, these considerations for allowing greater or lesser standards should be balanced within the PD. For example, permitting greater density in a PD could be approved, in exchange for a greater amount of open space than a similar project, not located in a planned development zone, would be required to provide.

(Ord. No. 97-5048, § 11, 12-22-97; Ord. No. 02-5193, § 2, 4-8-02)

### SEC. 27-1304. PD APPLICATION PROCESS.

A PD zone shall be established by following the procedure described below, which includes review by city and/or county staff, the city or county zoning commission and the appropriate governing body, including the participation of interested citizens.

The applicant is encouraged to submit a proposed PD project for conceptual review with city and/or county staff. This review is intended to get input from staff and to indicate any potential problem areas before a formal application is submitted.

If the project is required to go through the subdivision review process, it is recommended that this platting process occur concurrently with the PD zone change process.

(Ord. No. 97-5048, § 11, 12-22-97)

### SEC. 27-1305. PD ZONE CHANGE SUBMITTAL REQUIREMENTS.

The applicant or his/her authorized agent shall submit the following information to the planning department to begin the PD zone change process (see also BMCC sections 27-1502 or 27-1508, city and county zoning commissions and city and county boards of adjustment):

(1) Legal description of the subject parcel(s), along with a map showing the dimensions, acreage and location of the parcel(s);

(2) A certified list of the names, addresses and legal descriptions of the owners of property within a radius of three hundred (300) or more feet, as determined by the zoning coordinator, from the exterior boundaries of the tract(s);

(3) Two (2) sets of gummed mailing labels with the names and mailing addresses typed or printed neatly of all of the property owners indicated on the certified list;

(4) The names and addresses of the owner(s) of the subject property and their agent(s), if any, along with the recorded property owner's signature;

(5) A development plan which shall consist of the following:

a. A written text description of the pd, which will be added as an amendment to the zoning regulations. The subjects addressed in the text amendment may refer back to the zoning regulations or site development regulations for the pd's standards or describe the pd's unique standards. This amendment should address some or all of the following subjects:

1. Purpose
2. Underlying land use classification(s)
3. Permitted uses
4. Special review uses
5. Prohibited uses
6. Minimum or maximum lot sizes
7. Minimum setbacks
8. Maximum lot coverage
9. Maximum height
10. Permitted projections
11. Density
12. Building design standards
13. Signs
14. Fencing
15. Landscaping in perimeter bufferyards and/or parking areas
16. Open space
17. Bicycle and/or pedestrian facilities
18. Application of site development standards
19. Vehicular access
20. Outside storage
21. Parking area development standards
22. Loading and unloading areas
23. Installation of improvements
24. Lighting
25. Other required documents
26. Other regulations

This list is not intended to be a complete list of all potential subjects which can be addressed in the PD amendment.

b. A site plan or master plan which shows the specific location of proposed land uses, i.e. lot(s) and block(s), along with building envelopes (for multiple family, commercial or industrial uses only), designated parks and/or open space, site circulation, etc. Plans for

small scale projects should resemble site plans, by showing specific locations of building(s), parking, landscaping, etc. Larger scale projects, however, do not need to show exact building footprints, but may be used to illustrate possible locations within the approved building envelope.

(6) A tabulation of the total land use area and percentage thereof designated for various proposed uses. The PD should include a balance between areas which are developed and those designated as open space or park. For commercial/industrial developments, landscaped areas may also be counted towards open space;

(7) General circulation patterns indicating both public and private vehicular, pedestrian and bicycle ways. A traffic accessibility study will be required for any project that exceeds five hundred (500) vehicle trips per day;

(8) Relationships of present and future land uses to the following: the surrounding area; the 1990 Yellowstone County Comprehensive Plan; the Billings Urban Area Transportation Plan; BikeNet; the Public Utilities Department Facilities Plan; any specific master plan or neighborhood plan adopted for the area and any other pertinent City or county plans;

(9) A statement of provisions for ultimate ownership and maintenance of all parts of the development;

(10) A preliminary report indicating provisions for storm drainage, solid waste disposal, grading and public or private utilities;

(11) Proposed development phasing, if any, and an approximate time schedule for development;

(12) Payment of all applicable fees; and

(13) Any other information the applicant believes will support his/her request or other information as requested by the zoning coordinator or planning department.

(14) The planning department shall review the application for completeness. If the application is determined incomplete by the planning department, the zoning coordinator or his/her designee shall notify the applicant of all deficiencies. Once the application is determined complete, the application will proceed to be processed as described in the following sections.

(Ord. No. 97-5048, § 11, 12-22-97)

## SEC. 27-1306. PLANNING DEPARTMENT REVIEW AND RESPONSIBILITY.

The zoning coordinator or his/her designee, upon receiving a complete application for a PD zone change and development plan shall do the following:

(1) Distribute copies of the PD zone change and development plan to appropriate departments of the city and/or county to fully evaluate the impact of the planned development upon public facilities and services;

(2) Study each application with reference to its appropriateness and effect on existing and proposed land uses, and its relationship to the comprehensive plan;

(3) Notify, by mail, the applicant and/or his/her authorized agent at least five (5) days prior to the date of the preliminary review of the date, time and place of such review;

(4) Notify, by mail, all property owners within three hundred (300) or more feet, as determined by the zoning coordinator, from the exterior boundaries of the property subject to the pd zone change, at least fifteen (15) days in advance of the time, date, place of the preliminary review, along with the existing and proposed use(s) and the development plan; and

(5) Place notice of the preliminary review on the property subject to the PD zone change at least fifteen (15) days in advance of the date of public hearing.

(Ord. No. 97-5048, § 11, 12-22-97)

### SEC. 27-1307. PRELIMINARY REVIEW BY THE DEVELOPMENT REVIEW COMMITTEE.

The preliminary review is intended to provide an opportunity for the development review committee to review the PD zone change and development plan with the applicant and surrounding property owners. The surrounding property owners are encouraged to give their comments during the period prior to the preliminary review meeting so that the developer can be made aware of any major differences or concerns on the part of the surrounding property owners.

The zoning coordinator or his/her designee shall conduct the preliminary review and lead the DRC in examining the PD zone change and development plan. The DRC shall also make a recommendation on the PD zone change and development plan. The DRC, applicant and/or surrounding property owners shall be allowed to discuss any concerns in the proposal. Any changes/deficiencies found at the preliminary review should be incorporated into the proposal and resubmitted to the zoning coordinator. This resubmittal shall be returned to the DRC for review, along with a recommendation which will be forwarded to the zoning commission.

The applicant shall be allowed to withdraw the application at any time prior to the publication of the legal advertisement for the public hearing before the zoning commission, without penalty regarding the four (4) month or one (1) year waiting periods. After publication of the legal advertisement, any withdrawal shall be governed by the requirements found in BMCC sections 27-1502 or 27-1508.

(Ord. No. 97-5048, § 11, 12-22-97)

### SEC. 27-1308. ZONING COMMISSION ACTION.

The zoning commission, with jurisdiction over the project, shall review and hold a public hearing on the PD zone change and make a recommendation to its governing body on the zone change, as specified in BMCC section 27-1502 (city zoning commission), subsection (d) or

BMCC section 27-1508 (county zoning commission), subsection (d). In addition, the zoning commission shall also make a recommendation to its governing body on the development plan.

(Ord. No. 97-5048, § 11, 12-22-97)

### SEC. 27-1309. GOVERNING BODY ACTION.

The governing body with jurisdiction over the project shall review, hold a public hearing and take action on the PD zone change as specified in BMCC sections 27-1502 (city zoning commission), subsections (e) and (f) or BMCC section 27-1508 (county zoning commission), subsection (e). In addition, the governing body shall also take action on the development plan.

(Ord. No. 97-5048, § 11, 12-22-97)

### SEC. 27-1310. MODIFICATION OF THE APPROVED DEVELOPMENT PLAN.

Any modification of the approved development plan requested by the developer shall be processed using the same procedures for a new application, as set forth in above BMCC sections 27-1304 through 27-1309. However, minor modifications may be approved by the zoning coordinator if he/she makes the following findings:

(1) No change in the overall character of the development;

(2) No increase in the number of residential units greater than two (2) percent;

(3) No additional allowed uses;

(4) No reduction in open space greater than two (2) percent; and

(5) No change in the approved minimum setbacks, maximum lot coverage or maximum allowed height.

(Ord. No. 97-5048, § 11, 12-22-97)

## ARTICLE 27-1400. SHILOH CORRIDOR OVERLAY DISTRICT

### SEC. 27-1401. PURPOSE.

The purpose of the Shiloh Corridor Overlay District is to provide standards for industrial, commercial, and mixed-use development as called for in the West Billings Plan. This overlay zoning district is intended to promote an aesthetically pleasing and distinct entryway corridor by encouraging abundant landscaping, attractive building design, and preservation of scenic vistas. Single family and duplex residential development are exempt from the requirements of this overlay zoning district. The overlay zoning does not alter the category of permitted uses in the underlying zoning.

(Ord. No. 04-5310, § 1, 12-13-04)

### SEC. 27-1402. DISTRICT BOUNDARIES.

The boundaries of the Shiloh Corridor Overlay District shall be that displayed on the map at the end of section 27-1403. In no case shall the boundaries of the district exceed a depth of five hundred (500) feet from the centerline of the right-of-way of Shiloh Road from King Avenue north to Rimrock Road. If only a portion of the property falls within the boundaries of the district, the entire property will be subject to the regulations in sections 27-1427 through 1453.

(Ord. No. 04-5310, § 1, 12-13-04)

### SEC. 27-1403. REVIEW CRITERIA.

(a) *Generally.* The Shiloh Corridor overlay district review process is a review of development proposals against a set of absolute and relative criteria. Site and development plans are evaluated to determine whether the proposed development meets the identified criteria. If the criteria are met, the development may proceed.

New developments and existing development in which the gross floor area (GFA) or the number of parking stalls is increased by twenty-five (25) percent must comply with these regulations.

(b) *Absolute criteria.* A developer must meet all absolute criteria to obtain planning and community services department approval. The absolute criteria are defined in sections 27-1433 through 27-1435. Absolute criteria also include all other applicable codes, ordinances, and statutes, including, but not necessarily limited to, minimum engineering and building standards, public service and utility requirements, and environmental regulations.

(c) *Relative criteria.* Relative criteria are the "points" of the review process. Each development must obtain a specified minimum number of points based on the relative criteria identified in section 27-1536. The development plans are evaluated against the relative criteria and scored on a point chart.

(Ord. No. 04-5310, § 1, 12-13-04)

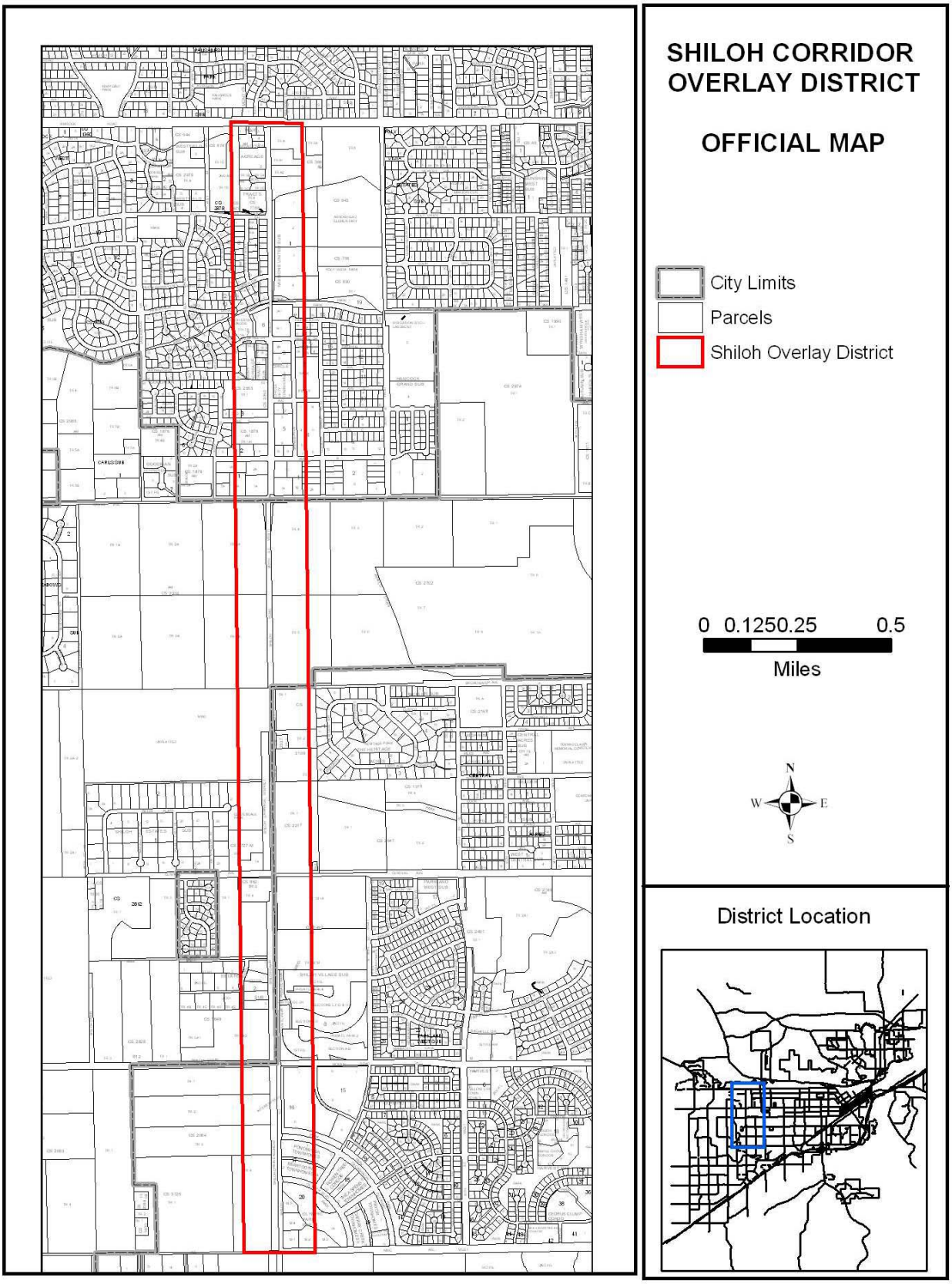
SHILOH CORRIDOR
OVERLAY DISTRICT
OFFICIAL MAP
City Limits
Parcels
Shiloh Overlay District
0 0.1250.25 0.5
Miles
N
W
E
S
District Location

## SEC. 27-1404. APPLICATION AND APPROVAL PROCESS.

(a) *Approval required.* This chapter applies only to properties within the City of Billings. Any new development or remodel requires a building permit from the city Building Division. Planning Division approval is also required prior to construction. Planning Division approval is to ensure compliance with the zoning regulations. This does not in anyway imply approval by any other city department.

(b) *Content of application.* Each application for development located in the Shiloh Corridor overlay district shall include the following:

(1) The name and address of the property owner and applicant, if different;

(2) The legal and general description of the tracts or lots upon which review is sought;

(3) A statement of proposed use;

(4) A complete site development plan drawn to scale of no less than one (1) inch = forty (40) feet indicating:

a. Plans for landscape development, including irrigation, drainage, grading, and planting detail showing species, size and spacing of trees and shrubs and percent of living and non-living material;

b. Dimension and location of all existing and proposed buildings, recreation areas, utility and service areas, trash storage area, fire hydrants, access drives, full width of street and adjacent drives, parking areas, existing utility lines, and easements;

c. Dimension, location and description of all other existing and proposed site improvements including fences, walls, walkways, patios, decks, and barriers;

d. A clear delineation of all areas to be paved or surfaced, including a description of surfacing materials to be used;

e. Location and description of all off-site improvements and right-of-way dedication; and

f. Location and type of lighting, including a scaled or dimensioned elevation of each type of lighting fixture, and the maximum illumination measured in foot-candles at the property line.

g. Information describing how sound suppression will be accomplished when property is adjacent to residential use.

(1) Building plans drawn to a scale of no less than one-sixteenth (1/16) inch = one (1) foot for all structures, including architectural plans for proposed buildings complete with exterior finishes and including floor plans and elevations.

(2) A signage plan describing specifications and location of all signage. A separate application and approval shall be required for all signs;

(3) A timetable for the proposed construction project; and

(4) A complete form showing compliance with the relative criteria and points assigned (see section 27-1424);

(5) Any other information pertinent to the particular project which, in the opinion of the zoning coordinator, is determined to be necessary for the review of the project.

Within fifteen (15) working days following the submittal of a complete application, the zoning coordinator or his/her designee shall approve or deny the application, unless the applicant consents in writing to an extension of the review period. In the event that review exceeds fifteen (15) days, the applicant may seek immediate approval from the planning director. If an application is determined to be incomplete, the applicant shall be notified within five (5) days of the submittal. Should the application be denied, the applicant shall be notified in writing specifying all areas of noncompliance with this section.

(Ord. No. 04-5310, § 1, 12-13-04)

**SEC. 27-1405. DEFINITIONS.**

Terms not specifically defined in this chapter shall have the same meanings as defined in section 27-201. The standard dictionary meaning shall be applied to terms not otherwise defined.

(Ord. No. 04-5310, § 1, 12-13-04)

**SEC. 27-1406. ABSOLUTE CRITERIA.**

(a) *Development standards.*

(1) *Shiloh road frontage setbacks.* The minimum frontage setback from the property line along Shiloh Road for all developments excluding residential single family or duplex shall be twenty (20) feet. The clear vision triangle will be maintained as required in section 27-615. Side and rear building setbacks shall be the same as the underlying zoning district. All arterial setbacks as outlined in section 27-602 must also be maintained.

(2) *Other regulations.* All other city and county codes shall apply, including but not limited to the following: building, zoning, site development, parking and drainage regulations that are not directly addressed in this chapter. Where requirements are addressed in both this section and other codes, those in this section apply.

(3) *Sidewalks.* All sidewalks along internal platted streets shall be boulevard walks. The boulevard shall be at least five (5) feet wide and landscaped. The landscaping shall contain ground cover such as sod, shrubs, flower beds or living plant material. River rock, bark chips, flagstones or similar non-living material may be used as mulch or decorative landscape features to supplement the living plant material. No more than twenty-five (25) percent of the landscaped area shall contain non-living material. There shall be at least one (1) canopy tree per every forty (40) linear feet.

(b) *Landscaping standards.*

(1) *Shiloh Road frontage setback landscaping required.* All developments are required to landscape the frontage setback adjacent to and along the length of Shiloh Road, excluding driveways. Frontage setbacks shall be landscaped with a minimum of five (5) canopy or evergreen trees and fifteen (15) shrubs per one hundred (100) feet of frontage.

a Developer is encouraged to mass trees to create interest along the frontage. Two (2) ornamental trees may be substituted for one (1) canopy or evergreen tree. Within 200 lineal feet of street frontage the required number of trees and shrubs may be massed together to create one or more large tree and shrub planting area(s) somewhere within the 200 lineal foot length. Developer is encouraged to mass ornamental trees and shrub beds at intersections with Shiloh Road and other right-of-way frontage

roads and at internal street intersections while still maintaining clear vision triangle height restrictions, pursuant to section 27-618.

b. Up to thirty (30) percent of the required landscaping may be located in the boulevard of the public right-of-way.

(2) *Right-of-way frontage other than Shiloh Road landscaping required.* All developments are required to landscape the frontage setback adjacent to and along the length of all rights-of-way other than Shiloh Road, excluding driveways. Right-of-way frontage setbacks shall be landscaped with a minimum of three (3) canopy or evergreen trees and eight (8) shrubs per one hundred (100) feet of frontage. See (1) a. above

a. Up to thirty (30) percent of the required landscaping may be located in the boulevard of the public right of way.

(3) *Off-street parking lot landscaping.*

a. A minimum of twenty (20) square feet of internal landscaping shall be provided for each parking space.

b. One (1) canopy and/or evergreen tree and (5) shrubs shall be required for every eight (8) parking spaces. Developer is encouraged to mass trees to create interest inside parking lot. Two (2) ornamental trees may be substituted for one (1) canopy or evergreen tree. Developer is encouraged to create several large shrub areas throughout the parking lot and to use parking lot islands with trees and shrubs to direct traffic through parking lot.

c. The shortest dimension of any parking lot landscaped area shall not be less than five (5) feet.

d. Internal parking lot landscaping shall be proportionately dispersed, at the developer's discretion, in order to define aisles and limit unbroken rows of parking. The maximum unbroken distance in any direction shall be limited to one hundred (100) feet. See section 27-1106 for additional requirements.

(4) *Commercial uses abutting residential and public uses.* All commercial or industrial uses shall be separated from abutting, including across an alley, residential single family, duplex and public uses by a fifteen (15) foot wide bufferyard. The bufferyard shall be landscaped with a minimum of ~~six (6)~~ five (5) canopy or evergreen trees and twelve (12) shrubs per one hundred (100) linear feet. See (1) a. above. If the adjacent land use is a vacant building or ground, then the zoning shall be used in place of the land use.

A solid fence or wall that is architecturally similar in color and design shall be required on the property line. The fence shall be a minimum of six (6) feet high. Chain link or other wire fencing material is prohibited. All fences shall be maintained by the commercial property owner.

(5) *Non-living material allowed.* River rock, bark chips, flagstones or similar material may be used as mulch or decorative landscape features to supplement the living plant material. Bufferyards may include boulevard sidewalks. No more than twenty-five (25) percent of the landscaped area shall contain non-living material.

(6) *Landscape maintenance required.* All landscaped areas shall be irrigated, maintained and kept free of weeds, debris and litter. Dead or dying material shall be replaced within one (1) year.

(7) *Protection of landscaped areas.* Landscaped areas within parking lots or along the perimeter of the property must be protected from vehicular traffic through the use of continuous concrete curbs, extruded asphalt or other approved barriers.

(8) *Automobile and recreation vehicle sales.* Automobile and recreation vehicle sales are required to install two (2) of the required trees and one and one half (1½) the required shrubs along street frontages or are exempt from the tree requirements as long as the required trees are replaced with shrubs and/or other landscape features, including but not limited to water features, landscape rock, public art, etc.

(9) *Plant standards.*

a. *Canopy tree.* A species of tree that normally bears crown foliage no lower than six (6) feet above ground level upon maturity. Minimum size of canopy trees shall be at least two (2) inches in caliper at the time of installation. Caliper shall be defined by the American Nurseryman Standard Definition.

b. *Evergreen.* A tree or shrub of a species that normally retains leaves/needles throughout the year. Minimum size of evergreen trees shall be five (5) feet in height at the time of installation.

c. *Ornamental tree.* A species of tree that normally bears flowers in the spring time of the year or has other ornamental features such as unique leaves, bark, leaf color or fruit. Minimum size at installation shall be one and one half (1½) inch caliper. Caliper shall be defined by the American Nurseryman Standard Definition.

d. *Shrubs.* The minimum size of a shrub shall be at least five (5) gallons.

e. *Recommended tree types.* It is recommended that the developer work with the city parks department, county extension agent, a local greenhouse operator, landscape architect or other professional designer to determine the species of trees that are most suitable for each situation. The use of native, drought tolerant plant materials is strongly encouraged. Evergreen trees are discouraged for internal parking areas if they limit sight lines. The planting of trees should be done in such a manner as to provide maximum solar efficiency throughout the site. A list of recommended plant material shall be available at the planning department.

f. *Fractions in the calculations of number of trees and shrubs.* In the calculation of trees and shrubs for bufferyards or parking landscaping, fractions of less than five-tenths (.5) shall be rounded down to the nearest whole number; fractions of more than five-tenths (.5) shall be rounded up to the nearest whole number.

(Ord. No. 04-5310, § 1, 12-13-04)

**SEC. 27-1407. BUILDING DESIGN STANDARDS.**

(a) *Materials.* All buildings shall be completed on all sides with an acceptable finishing material. The following materials are acceptable: brick, fluted block, colored textured block, glass, stucco, architectural metal panels with covered fasteners, exterior insulation and finishing systems (i.e., Dryvit, etc.), stone, wood, and integrally colored or exposed aggregate concrete. Exposed-seam metal buildings shall be prohibited unless covered with an acceptable finishing material.

(b) *Roofs.* Roofs exposed to view shall be finished with a durable material that is architecturally coordinated in color and design with the building material. Recommended materials include: standing seam, dimensional asphalt shingles, shakes or shingles. Other types or styles of roofing materials that are consistent with this chapter may be approved by the zoning coordinator or his/her designee. Pitched roofs are encouraged wherever possible.

(c) *Mechanical equipment.* mechanical equipment, placed at ground level or on a roof, shall be screened. The screening shall be at least the height of the mechanical equipment. Sound suppression/abatement shall be provided when mechanical equipment is installed on property that is adjacent to residential uses or zoning districts.

(d) *Elevations and facades.* Buildings shall incorporate one or more of the following: recesses, off sets, angular forms, or other architectural features such as bell towers or clock towers to provide a visually interesting shape. The break in facade shall be a minimum of twelve (12) feet in length and with a minimum protrusion or recess of four (4) feet. Buildings shall incorporate a break in the architectural facade at least every sixty (60) feet. It is encouraged that each offset area contain landscaping or other similar amenities that will complement the offset area.

(Ord. No. 04-5310, § 1, 12-13-04)

**SEC. 27-1408. ADDITIONAL PROVISIONS.**

(a) *Storage of merchandise.* Any permitted storage of merchandise outside an approved building shall be within an area enclosed with a sight obscuring fence at least six (6) feet in height that is architecturally coordinated in color and design with the building. However, vehicle sales lots and plant materials may be displayed outside of an approved building or enclosed area so long as they are on the same site wherein the business displays the bulk of its goods for sale. Outside promotional displays are allowed during business hours only. Bufferyards or required landscaping shall not be used for the displaying of merchandise. Chain link and other types of wire fencing are prohibited.

(b) *Area lighting.*

(1) All outdoor pole lighting shall be fully shielded (no light emitted by the fixture is projected above the horizontal plan of the fixture) and mounted at heights no greater than twenty (20) feet above grade.

(2) All outdoor lighting, except street lights, shall be located and aimed or shielded so as to minimize stray light trespassing across property boundaries.

(c) *Canopy, marquee and "wall pack" lighting.* Canopy, marquee and "wall pack" lighting shall be fully shielded. No internally illuminated fascia shall be allowed.

(d) *Storage of junk.* No person shall store junk, partially or completely dismantled vehicles, or salvaged materials outside a building. In the case of repair shops, such material must be enclosed within a building or an area having a sight-obscuring fence at least six (6) feet in height. Chain link or other type of wire fencing is prohibited.

(e) *Waste storage area.* All solid waste storage shall be located within an area enclosed with a solid, masonry wall that is architecturally coordinated in color and design with the building. The following materials are acceptable: brick, fluted block, colored textured block, glass, stucco, architectural metal panels with covered fasteners, exterior insulation and finishing systems (i.e., Dryvit, etc.), stone, wood, and integrally colored or exposed aggregate concrete. Exposed-seam metal buildings shall be prohibited unless covered with an acceptable finishing material. Solid waste enclosures are encouraged to be landscaped.

(Ord. No. 04-5310, § 1, 12-13-04)

### SEC. 27-1409. DEVELOPMENT FEATURES REQUIRED TO EARN POINTS (RELATIVE CRITERIA).

In accordance with section 27-1403, each application for development in this overlay district must score a minimum number of points based on the relative criteria described below. The number of points required depends on the underlying zoning of the property on which the development is located. Design elements are listed under nine (9) category headings. A project shall earn one (1) point for each design element that it incorporates. At least one (1) point shall be earned from eight (8) out of the nine (9) categories listed. The developer must attain the following minimum number of points:

Twenty (20) points if the lot size is greater than twenty-five thousand (25,000) square feet; or

Fifteen (15) points if the lot size is less than twenty-five thousand (25,000) square feet.

(1) *Site development:*

a. Pavement along Shiloh frontage setback is less than or equal to thirty-five (35) feet.

b. Construct one or more public use spaces such as mini-parks, water feature, playfields or playgrounds, rest areas, for example.

(2) *Access:*

a. A transit or school bus stop.

b. Easement granted for bike path or pedestrian trail other than sidewalk. The easement must be in addition to what is required by the Subdivision Regulations.

c. Construction of bike path or pedestrian trail other than sidewalk (one (1) point for each fifty (50) feet of ten (10) foot wide concrete or comparably durable hard surface pathway, four (4) points maximum).

d. Provision for internal access between lots.

e. Shared driveway.

(3) *Lighting:*

a. Demonstrate lighting does not spill over to adjacent residential properties.

b. Establish an overall outdoor lighting budget for the property that does not exceed fifty thousand (50,000) initial lamp lumens per net acre for all fully shielded and unshielded light sources.

c. Continuity of lighting fixture design with adjacent properties.

d. Incorporate outdoor light fixtures at heights less than twenty (20) feet.

(4) *Parking:*

a. A joint use parking agreement.

b. Parking provided does not exceed one hundred (100) percent of required spaces.

c. Landscaping internally integrated in parking areas and/or sales area.

d. Parking lots placed at the rear and/or side of the building, none in front.

(5) *Scale:*

a. The mass and scale does not exceed that of the surrounding development by more than ten (10) percent.

b. The height of structures does not exceed that of the surrounding development by more than ten (10) percent.

c. The building size does not exceed that of the surrounding development by more than ten (10) percent.

(6) *Landscaping:*

a. Buildings have foundation planting.

b. Landscaping exceeds minimum number of trees and shrubs that are required by ten (10) percent each.

c. Landscaping material exceeds minimum caliper width by one (1) inch or fifty (50) percent additional height required.

d. Drought tolerant tree, shrub and grass species requiring a significant reduction of water use.

e. Terraced or bermed site design.

f. Stormwater retention areas include significant landscaping.

g. Bufferyards larger than required by at least ten (10) percent.

h. Continuity of landscaping features at interface with adjacent property.

i. Canopy trees placed in the boulevard along internal streets at one tree per twenty-five (25) feet of street frontage.

j. Installation of a curvilinear boulevard walk.

k. Incorporates existing trees in landscape design.

(7) *Architectural design:*

a. Building materials are natural, i.e. wood or stone.

b. Pitched roof with a minimum 3:12 pitch.

c. Exceeds the state energy code requirements by:

Twenty-five (25) percent = One (1) point

Fifty (50) percent = Two (2) points

More than seventy-five (75) percent = Three (3) points

d. The use of alternative energy sources, for example: photovoltaic, solar, geothermal, wind.

e. Each building up to seventy-five (75) feet in length contains four (4) facade relief elements;

f. Each building of seventy-five to one hundred fifty (75-150) feet in length contains five (5) facade relief elements;

g. Each building exceeding one hundred fifty (150) feet in length contains six (6) facade relief elements;

Facade relief elements:

1. Two (2) or more colors.
2. Natural earth toned colors.
3. Substantial fenestration using windows, doors, or other openings.
4. Two (2) or more materials that break up the mass of the structure.
5. Articulation of the parapet walls.
6. Change in wall plane.
7. Change in roof plane.
8. Extended roof overhangs.
9. Significant variation in building masses and/or forms.

(8) *Signage:*

a. Signage is not internally illuminated.

b. Monument signs used in lieu of pole signs.

c. Area of signage is at least twenty (20) percent less than total area allowable for each sign type.

d. Maximum sign height does not exceed one-third ( 1/3) the maximum height of the building(s).

e. Comprehensive sign plan.

(9) *Mixed use:* One point will be given for each building that contains two (2) or more of the following uses:

a. Office.

b. Retail.

c. Personal services such as dry cleaner, laundromats, beauty salons.

d. Residential.

e. Hotel/motel.

f. Medical.

g. Entertainment.

h. Restaurant.

(Ord. No. 04-5310, § 1, 12-13-04)

**SEC. 27-1410. SIGNAGE STANDARDS--PURPOSE, INTENT, AND SCOPE.**

The purpose and intent of this section is to promote commerce, traffic safety, and community identity while improving the visual environment of residential, commercial, and industrial areas.

This section of the Code shall not regulate traffic and directional signs installed by a governmental entity or in a private parking lots; signs not readable from nor intended to be viewed from a public right-of-way; merchandise displays; point-of-purchase advertising displays, such as product

dispensers; national flags; flags of a political subdivision; symbolic flags of an institution; legal notices required by law; barber poles; historic site monuments/plaques; gravestones; structures intended for a separate use, such as phone booths, donation and recycling containers; lettering or symbols applied directly onto or flush-mounted magnetically to a motor vehicle operating in the normal course of business.

(1) *Permits required.* Any on-premise sign shall hereafter be erected, re-erected, constructed, painted, posted, applied or structurally altered in accordance with this chapter and pursuant to a sign permit issued by the planning and community services department. A sign permit shall be required for each group of signs on a single supporting structure installed simultaneously. Thereafter, each additional sign erected on the structure must have a separate sign permit. The owner of a sign shall produce a permit upon request. Within fifteen (15) working days following the submittal of a complete sign permit application, the zoning coordinator or his/her designee shall approve or deny the application, unless the applicant consents in writing to an extension of the review period. In the event that review exceeds fifteen (15) days, the applicant may seek immediate approval from the planning director. If an application is determined to be incomplete, the applicant shall be notified within five (5) days of the submittal. Should the application be denied, the applicant shall be notified in writing specifying all areas of noncompliance with this section.

(2) *Permit applications.* All permit applications for signs shall include a site plan that provides the following information:

a. The location of the affected lot, building and sign;

b. The scale of the site plan;

c. A drawing of the proposed sign or sign revision, including size, height, copy, structural footing details, method of attachment and illumination;

d. All existing signs on the site including their size and height; and

e. The legal description of the parcel.

(Ord. No. 04-5310, § 1, 12-13-04)

**SEC. 27-1411. DEFINITIONS.**

The definitions used in this chapter may be found below and in section 27-703 of the city sign regulations or article x, section of the Yellowstone County sign regulations.

*Bulletin board* means a sign which identifies an institution or organization on the premises on which it is located and which contains the name of the institution or organization, the names or individuals connected with it, or general announcements of events or activities or similar messages.

*Electronically changeable message sign* means a computer programmable, microprocessor controlled electric display utilizing a means of illumination (light bulb, LED, fiber optics, etc) upon which alphanumeric characters, graphics, electronic animations, symbols and words can be displayed. Message and symbols that have the capability of alternating, traveling and animating along with any other of a variety of change, appear and disappear methods are allowed. This definition does not include video boards.

*Flashing sign* means an electrical sign or portion thereof which changes light intensity in a brief, brilliant, or sudden and transient outburst of light causing a steady on and off, glittering, sparkling, or scintillating pattern.

*Individual business* means one business on one parcel provided that the parcel is not part of a multiple business complex; and also provided the parcel is not part of a group of multiple contiguous parcels under the same ownership.

*Monument sign* means a sign and supporting structure constructed as a solid structure or one that gives the appearance of a continuous, non-hollow, unbroken mass.

*Multiple businesses* include businesses that may be located in a single building or in multiple buildings on a single site.

*Support structure(s)* means posts or columns and their anchors and bolts that structurally support the sign attached to it.

*Three-sided sign* means a sign with three (3) faces.

*Two-sided sign* means a sign with two (2) faces.

(Ord. No. 04-5310, § 1, 12-13-04)

**SEC. 27-1412. EXEMPT SIGNS.**

The following shall not require a sign permit, provided that these exemptions shall not be construed as relieving the owner from the responsibility to comply with the provisions of this Code or any other law or ordinance, including the Uniform Building Code.

(1) The changing of the advertising copy or message on a lawfully erected sign that is currently in compliance with this section, reader board or similar sign specifically designed for replaceable copy.

(2) Painting, repainting or normal maintenance, unless a structural or electrical change is made.

(3) Temporary banners and temporary signs as permitted herein.

(4) Real estate sign as permitted herein.

(5) Incidental signs.

(6) Political signs.

(7) Bench signs on city or county rights-of-way, provided approval has been granted for the location by the appropriate city or county agency.

(Ord. No. 04-5310, § 1, 12-13-04)

**SEC. 27-1413. PROHIBITED SIGNS.**

The following signs are prohibited in all zones unless otherwise specifically permitted.

(1) Sign which by coloring, shape, wording or location resemble or conflict with traffic control signs or devices.

(2) Signs that create a safety hazard for pedestrian or vehicular traffic.

(3) Flashing signs.

(4) Portable signs.

(5) Portable reader boards.

(6) Portable electric signs.

(7) Banner signs.

(8) Signs attached to or placed on a vehicle or trailer parked on public or private property, provided that this provision shall not be construed as prohibiting the identification of a firm or its product on a vehicle operating during the normal course of business. Franchised buses and taxis are exempt from these provisions.

(9) Roof signs.

(10) Video boards.

(11) Billboards.

(12) Painted signs on buildings, including those attached on or to the surface of windows.

(Ord. No. 04-5310, § 1, 12-13-04)

**SEC. 27-1414. SIGNS PERMITTED IN ALL ZONES IN CONNECTION WITH SPECIFIC USES.**

The following signs may be permitted in any zone, subject to the limitations as provided herein.

(1) *Bulletin boards.* Bulletin boards may be permitted on the premises of public, charitable or religious institutions, subject to the following:

a. Such sign shall contain not more than thirty-two (32) square feet in area on a face and may be double-faced.

b. No part of the sign shall exceed a height of six (6) feet above the ground.

c. The sign, if lighted, shall use low-intensity lighting.

d. A thirty-two (32) square foot, double-faced sign, no higher than fourteen (14) feet above grade, is authorized for a public or private school on property not less than three (3) acres in size.

(2) *Temporary residential subdivision or area name signs.* A temporary real estate sign advertising the prospective sale or lease of a group of lots or dwellings within a tract, condominium, or apartment complex shall be permitted, subject to the following conditions:

a. The freestanding sign shall be located on the premises being sold or leased.

b. The sign shall not exceed forty (40) square feet in area on a face and may be double-faced.

c. The sign shall remain only as long as property remains unsold or unleased for the first time with the tract, but not to exceed one (1) year. The planning division may extend the one-year time period upon written request by the owners/developers of the project.

d. The sign shall be non-illuminated.

e. The top of the sign shall be no higher than ten (10) feet above grade of the lot or parcel on which the sign is located.

(3) *Permanent residential subdivision or area name signs.* Decorative subdivision or area name signs of a permanent character at the street entrance or entrances to the subdivision or area that identifies the name of the subdivision or area only are permitted, subject to the following conditions:

a. The sign shall consist of decorative building material with illuminated, indirectly lighted or non-illuminated name plates or letters, and be located in a maintained landscaped area; and

b. The wall and or sign shall not exceed six (6) feet above grade of the lot or parcel.

(4) *Contractor, architect, surveyor, or engineer signs.* One on-premises sign identifying the project, developers, building contractor and/or subcontractors, architect, surveyor and engineer engaged in the construction is permitted on a property during the period of construction, provided that:

a. The sign is located on the parcel on which the construction is located.

b. The sign shall not exceed forty (40) square feet in area; and

c. The top of the sign shall not exceed ten (10) feet above grade of the lot or parcel on which the sign is located. The sign shall be removed prior to final building inspections. However, no such sign shall be maintained for a period in excess of twelve (12) months without approval from the planning department. The planning department may extend the one (1) year time period upon written request of the owners/developers of the project.

(5) *Real estate sign.*

a. *Residential and agricultural use or property.* One (1) temporary on-premise sign per frontage road, advertising the sale, lease or rental of the building, property or premises, is permitted on the property. Such sign shall be unlighted, no more than five (5) square feet and no higher than five (5) feet above grade. A thirty-two (32) square foot sign is allowed on agricultural property of twenty (20) acres or more, with or without a dwelling on site.

b. *Commercial and industrial use or property.* One (1) temporary on-premise sign advertising the sale, lease or rental of the building, property or premises is permitted on the property. Such sign shall be unlighted, no more than thirty-two (32) square feet and no higher than ten (10) feet above grade.

c. *Open house and directional sign.* For (a) and (b), an open house or directional sign shall be allowed on each street access street to the property. Signs shall not be placed in such a manner as to interfere with vehicular or pedestrian traffic, shall be used when the property is actually open for immediate inspections, shall be unlighted, and shall be no more than five (5) square feet and no higher than three (3) feet above grade.

(6) *Electronically changeable message sign.* Electronically changeable message signs shall be permitted in community commercial, highway commercial, controlled industrial, heavy industrial, entryway general commercial, and entryway light industrial zones in accordance with the standards of sections 27-1417 through 27-1423 and their definitions.

(Ord. No. 04-5310, § 1, 12-13-04)

**SEC. 27-1415. SIGN STANDARDS IN AGRICULTURAL (A-O) AND RESIDENTIAL (A-S, R-150, R-96, R80 R-70R R-70, R-60R, R-60, R-50, RMF, RMF-R, RMH) ZONES.**

(a) *Permitted signs by zone.* Sign structures are permitted in the agricultural and residential zones in accordance with the following uses and standards:

(1) A nameplate, which indicates no more than the name and address of the occupant of the premises, is permitted, provided that such sign shall not exceed a maximum area of five (5) square feet and a maximum height of four (4) feet above grade.

(2) A freestanding or wall sign identifying a community residential facility, family day-care home, child day-care center in a residence, nursery school, or similar institution is permitted, provided that such sign shall not exceed a maximum area of five (5) square feet, a maximum height of four (4) feet above grade and is unlighted.

(b) *Permitted signs by use.*

(1) The standards in tables 1 and 2 apply to the following uses:

a. Residential/semi-public uses include a church, public park, multiple-family dwelling, dormitory, fraternity, sorority, nursing home, retirement apartment, public building, child day-care center, family day-care provider, non-profit community hall or lodge, animal clinic, cemetery, or sanitarium.

b. School/public uses include a school (kindergarten through university), hospital, police station, fire station, post office, or public golf course, incinerator, sold waste recycling transfer site, or landfills.

(2) Wall signs. On-premises wall signs are permitted, not to exceed the maximum number and size as shown in table 1. Wall signs shall be unlighted or have low-intensity lighting, and shall be placed flat against the outside wall of the main building.

| Use per Paragraph 2(a) | Maximum Number of Signs | Maximum Sign Area |
|---|---|---|
| Residential/Semi-Public | 1 | 20 square feet |
| Schools/Public Use | 1 | 32 square feet |

Table 1--Wall Signs--Agricultural and Residential Zones

(3) Freestanding signs. On-premises freestanding signs are permitted, not to exceed the maximum number, size and height as shown in table 2. On-premises freestanding signs shall be unlighted or have low-intensity lighting.

| Use per Paragraph 2(a) | Maximum Number of Signs | Maximum Sign Area | Maximum Sign Height |
|---|---|---|---|
| Residential/Semi- Public | 1 | 16 square feet | 6 feet |
| Schools/Public Use | 1 | 32 square feet* | 15 feet |

*Maximum sign area may be increased to forty-eight (48) square feet for monument signs seven (7) feet or less in height.

Table 2 - Freestanding Signs - Agricultural and Residential Zones

(c) *Multiple arterials.* In the event the use or group of uses is adjacent to more than one arterial, including through and corner lots, they will be allowed a freestanding sign exclusively oriented to the additional arterial. The above allowance shall be calculated independently, using only the additional arterial frontage. However, in no instance shall the square footage allowance from one arterial be transferred to the other.

(Ord. No. 04-5310, § 1, 12-13-04)

**SEC. 27-1416. SIGN STANDARDS FOR BUSINESS AND INDUSTRIAL (RP, NC, CC, HC, CI, HI, ELG, EGC, EMU, ELI).**

(a) *Permitted signs by zone.* Sign structures are permitted in commercial and industrial zones in accordance with the following uses and standards.

(1) *Wall signs--Individual and multiple businesses.* Wall signs are permitted on each wall of a building provided the wall sign does not exceed twenty (20) percent of the total area of the wall or a maximum of two hundred fifty (250) square feet,

whichever provides the smaller area. "False fronts" and mansard roofs shall not be included when calculating the total area of the wall.

(2) *Freestanding signs (pole or monument design)--Individual businesses.* One on-premises freestanding sign is permitted. Signs shall not exceed the area and height limits as provided in table 3.

| Zoning District | Maximum Area <= 100' Street Frontage | Maximum Area >= 100' Street Frontage | Maximum Sign Height |
|---|---|---|---|
| RP | 50 square feet | 50 square feet | 15 feet |
| NC | 50 square feet | 50 square feet | 15 feet |
| CC | 80 square feet | 140 square feet | 20 feet |
| HC | 80 square feet | 140 square feet | 20 feet |
| CI | 80 square feet | 140 square feet | 20 feet |
| HI | 50 square feet | 50 square feet | 15 feet |
| ELC | 80 square feet | 120 square feet | 20 feet |
| EGU | 80 square feet | 140 square feet | 20 feet |
| EMU | 50 square feet | 50 square feet | 15 feet |
| ELI | 80 square feet | 140 square feet | 20 feet |

Table 3 - Freestanding Signs - Commercial and Industrial Zones

(3) *Freestanding signs (pole or monument design)--Multiple businesses.*

a. Freestanding on-premises sign(s) for multiple businesses are permitted, not to exceed the number, area and height limits as provided in table 4.

b. Freestanding signage allowed for an individual business under paragraph (a)(2) of this section shall not be combined with signage allowed for multiple businesses under this paragraph.

c. The minimum separation between signs shall be five hundred (500) feet, measured from the center of the sign.

| Zoning District | Maximum Number of Signs | Maximum Area | Maximum Sign Height |
|---|---|---|---|
| RP | 1 | 75 square feet | 15 feet |
| NC | 1 | 75 square feet | 15 feet |
| CC | 1 per 500 feet of street frontage* | 175 square feet | 20 feet |
| HC | 1 per 500 feet of street frontage* | 175 square feet | 20 feet |
| CI | 1 per 500 feet of street frontage* | 175 square feet | 20 feet |
| HI | 1 per 500 feet of street frontage* | 75 square feet | 15 feet |
| ELC | 1 per 500 feet of street frontage* | 150 square feet | 15 feet |
| EGU | 1 per 500 feet of street frontage* | 175 square feet | 20 feet |
| EMU | 1 | 75 square feet | 15 feet |
| ELI | 1 per 500 feet of street frontage* | 175 square feet | 20 feet |

*One (1) freestanding sign is permitted on parcels with less than five hundred (500) feet of lineal street frontage.

Table 4 - Standards for on-premises signs for multiple businesses

(b) *Incentive to substitute height restricted monument signs for freestanding signs.*

(1) Monument signs, not to exceed seven (7) feet in height, may substitute for individual and multiple business signs under paragraphs (a)(2) and (3) with maximum sign number(s) and area(s) as provided in tables 5 and 6. There is no minimum separation requirement between signs.

| Zoning District | Maximum Number of Signs | Maximum Area/Each Sign |
|---|---|---|
| RP | 1 | 50 square feet |
| NC | 1 | 50 square feet |
| CC | 2 | 90 square feet |
| HC | 2 | 90 square feet |
| CI | 2 | 90 square feet |
| HI | 2 | 90 square feet |
| ELC | 2 | 80 square feet |
| EGC | 2 | 90 square feet |
| EMU | 2 | 50 square feet |
| ELI | 2 | 90 square feet |

Table 5--Standards for on-premises monument signs for individual businesses

*Two (2) freestanding signs are permitted on parcels with less than five hundred (500) feet of lineal street frontage.

| Zoning District | Maximum Number of Signs | Maximum Area/Each Sign |
|---|---|---|
| RP | 2 | 50 square feet |
| NC | 2 | 50 square feet |
| CC | 2 per 500 feet of street frontage* | 90 square feet |
| HC | 2 per 500 feet of street frontage* | 90 square feet |
| CI | 2 per 500 feet of street frontage* | 90 square feet |
| HI | 2 per 500 feet of street frontage* | 90 square feet |
| ELC | 2 per 500 feet of street frontage* | 80 square feet |
| EGC | 2 per 500 feet of street frontage* | 90 square feet |
| EMU | 2 per 500 feet of street frontage* | 50 square feet |
| ELI | 2 per 500 feet of street frontage* | 90 square feet |

Table 6--Standards for on-premises monument signs for multiple businesses

(c) *Multiple arterials.* In the event the use or group of uses is adjacent to more than one arterial, including through and corner lots, they will be allowed a freestanding sign exclusively oriented to the additional arterial. The above allowance shall be calculated independently, using only the additional arterial frontage. However, in no instance shall the square footage allowance from one arterial be transferred to the other.

(Ord. No. 04-5310, § 1, 12-13-04)

### SEC. 27-1417. MODIFICATION TO SIGN STANDARDS IN CC, HC, CI, HI, EGC, ELI ZONING DISTRICTS.

For shopping centers, industrial parks, mixed use developments, and hotel conference centers; the zoning coordinator may approve a comprehensive sign plan that deviates from the provisions set forth in section 27-1416 above, provided the following standards and conditions are met:

(1) The development exceeds the following minimum square foot floor area requirements:

a. Two hundred fifty thousand (250,000) square feet for a shopping center or hotel conference center.

b. Two hundred fifty thousand (250,000) square feet of commercial/industrial floor space for a mixed use development.

c. Three hundred thousand (300,000) square feet for an industrial park.

(2) The applicant shall submit a sign plan that includes size, location, height, lighting, construction materials, and orientation of all proposed signs in addition to any other information deemed necessary by the staff.

(3) The sign plan shall conform to the standards of section 27-1416; except that a maximum of three (3) of the allowed signs under section 27-1416 may be allowed an increase of twenty (20) percent in sign height and area over the maximum allowed in the underlying zone.

(4) The sign plan shall be consistent with the Yellowstone County - City of Billings 2003 Growth Policy, the West Billings Master Plan, and the purpose and intent of this section, as determined by the zoning coordinator.

(5) The applicant/owner(s) shall sign a binding agreement ensuring compliance with the approved sign plan. The agreement shall be filed with the planning department and shall apply to present as well as future property owners. All signage shall be installed in conformance with the approved sign plan.

(6) Modifications to the approved sign plan shall require reapplication and approval by the zoning coordinator.

(Ord. No. 04-5310, § 1, 12-13-04)

**SEC. 27-1418. SIGN LOCATION AND SETBACK.**

(a) All signs shall be located so that they:

(1) Do not interfere with vehicular or pedestrian accessibility or sight distance;

(2) Conform to the provisions of section 27-615, the clear vision triangles and visibility at intersections; and

(3) No sign may encroach upon, or overhang, adjacent property or public right-of-way.

(b) All signs shall be located and set back as follows:

(1) Any portion of a sign (including structural supports) that is higher than three (3) feet and less than seven (7) feet above grade shall be located a minimum of ten (10) feet back from any property line abutting a public right-of-way.

(2) Structural supports less than two (2) feet in width or diameter, measured at any point on the support, and three (3) to seven (7) feet above grade, shall be located a minimum of five (5) feet back from any property line abutting a public right-of-way.

(Ord. No. 04-5310, § 1, 12-13-04)

**SEC. 27-1419. SIGN AREA AND CALCULATION.**

(a) The sign area of a wall sign made up of letters, words or symbols shall be measured from the outside edge of the frame. The square footage of a sign composed of only letters, words or symbols shall be determined from imaginary straight lines drawn from high point to high point around the entire copy or grouping of such letters, words or symbols. Those portions that are an integral part of the sign display shall be considered in the determination of square footage allowed. An obvious border designed

as an integral part of a sign shall be calculated in the total square footage allowed. All measurements for sign height shall be from the grade to the topmost part of the sign.

(b) Logos or identification symbols shall be considered signs and shall conform to all provisions of this section.

(c) The sign area of a freestanding sign shall be measured from the outside edge of the frame. The sign area of a freestanding sign consisting of more than one sign shall be computed by adding together the total area(s) of all signs. Any portion of the sign not necessary for structural support of the sign or any structural support greater than two (2) feet in width shall be considered in the determination of the square footage of the sign. A ten (10) percent increase in sign area is allowed for decorative framing or borders. Area calculation does not include decorative rocks or landscaping adjacent to a monument sign.

(d) The sign area for multiple-sided signs shall be calculated as follows:

(1) The total sign area for a two-sided sign shall be calculated using one face, but the second face may not exceed the area of the first face.

(2) The total sign area for a three-sided sign shall be calculated using one face, but the second and third face total area may not exceed the area of the first face.

(Ord. No. 04-5310, § 1, 12-13-04)

### SEC. 27-1420. MAINTENANCE OF SIGNS.

(a) Any sign that has been approved or that has been issued a permit shall be maintained by the owner or person in possession of the property on which the sign is located. Maintenance shall be such that the signage continues to conform to the conditions imposed by the sigh permit.

(b) Any damaged sign base shall be repaired within sixty (60) days.

(c) Any signage which has been damaged to such extent that it may pose a hazard to passersby shall be repaired or removed immediately.

(Ord. No. 04-5310, § 1, 12-13-04)

### SEC. 27-1421. NONCONFORMING SIGNS.

Nonconforming signs are those that were permanently installed and legally erected prior to the adoption of this Code. Nonconforming signs shall be allowed to continue in use so long as they are continuously maintained, are not relocated, and are not structurally altered or made more nonconforming in any way. If a sign is nonconforming and the copy is changed in any way or the sign is structurally altered, the sign shall be brought into conformance with these regulations.

(Ord. No. 04-5310, § 1, 12-13-04)

### SEC. 27-1422. LANDSCAPING FOR FREESTANDING AND MONUMENT SIGNS.

All freestanding and monument signs shall be located in a landscaped area. Landscaping should be appropriately sited to ensure that signs are not blocked or obscured by trees or bushes.

(Ord. No. 04-5310, § 1, 12-13-04)

### SEC. 27-1423. SIGN ILLUMINATION.

Externally illuminated signs shall have lighting confined to the sign, and positioned and shielded to minimize impacts to the surrounding area(s). The light source for internally illuminated signs must be entirely enclosed within the sign. Internally illuminated signs shall be constructed with an opaque

background and translucent letters and symbols. (Opaque means that the material must not transmit light from an internal illumination source.)

(Ord. No. 04-5310, § 1, 12-13-04)

SEC. 27-1424. SHILOH CORRIDOR OVERLAY DISTRICT APPLICATION FORM.

## SHILOH CORRIDOR OVERLAY ZONE PERMIT

**Permit #_____**

### Application Information

Applicant Name: _____ Date: _____

Applicant Address: _____ Phone: _____

Property Owner Name (if different): _____

Property Owner Address: _____ Phone: _____

### Property Information

Property Address: _____

Section, Township, Range: _____ Zoning District: _____

Lot size: _____ sq. ft. Lot area covered by structure(s): _____sq.ft. _____%

Subdivision/COS: _____ Block: _____ Lot: _____

Proposed Use: _____

FOR OFFICE USE ONLY

Date Received _____

Number of relative criteria categories met: ____ Total number of points scored: _____

Approved _____ Denied _____ Date: _____

Reviewed By: _____

| RELATIVE CRITERIA | | |
|---|---|---|
| | • Applicant must obtain points from eight (8) of nine (9) categories.<br>• Applicant must obtain the following number of points:<br>20 points if the lot size is greater than 25,000 square feet.<br>15 points if the lot size is 25,000 square feet or less. | |
| 1. | **SITE DEVELOPMENT** | |
| | a. Frontage pavement less than 35' along Shiloh Road | _____ |
| | b. Public use space included | _____ |
| 2. | **ACCESS** | |
| | a. MET transit or school bus stop | _____ |
| | b. Bikepath or pedestrian trail easement (above what subdivision requires) | _____ |
| | c. Bikepath or pedestrian trail construction (1 point for each 50 feet, 4 points max) | _____ |
| | d. Reciprocal access between lots | _____ |
| | e. Shared driveway approaches | _____ |
| | f. Internal sidewalks incorporating stone, brick patterned or colored concrete. | _____ |
| | g. Installation of a curvilinear boulevard walk. | _____ |
| 3. | LIGHTING | |
| | a. Establish an overall outdoor lighting budget for the property that does not exceed 50,000 initial lamp lumens per net acre for all fully shielded and unshielded light sources. | _____ |
| | b. Continuity of lighting fixture design with adjacent properties. | _____ |
| | c. Incorporate outdoor light fixtures at heights less than twenty-five (25) feet. | _____ |
| 4. | **PARKING** | |
| | a. Joint use parking agreement. | _____ |
| | b. Parking does not exceed 100% of required spaces | _____ |
| | c. Landscaping internally integrated in parking areas. | _____ |
| | d. Parking lots placed at the rear and/or side of building – none in front. | _____ |

| | | |
|---|---|---|
| 5. | **SCALE** | |
| | a. Mass and scale of structures does not exceed that of the surrounding development by more than 10 percent. | _____ |
| | b. Height of structures does not exceed that of the surrounding development by more than 10 percent. | _____ |
| | c. Building size does not exceed that of the surrounding development by more than 10 percent. | _____ |
| 6. | **LANDSCAPING** | |
| | a. Buildings have foundation planting. | _____ |
| | b. Landscaping exceeds minimum number of trees and shrubs that are required by ten (10) each. | _____ |
| | c. Landscaping material exceeds minimum caliper width by one (1) inch or fifty (50) percent additional height required. | _____ |
| | d. Drought tolerant tree, shrub and grass species requiring a significant reduction of water use. | _____ |
| | e. Terraced or bermed site design. | _____ |
| | f. Stormwater retention areas include significant landscaping. | _____ |
| | g. Bufferyards larger than required by at least ten (10) percent. | _____ |
| | h. Continuity of landscaping features at interface with adjacent property. | _____ |
| | i. Canopy trees placed in the boulevard along internal streets at one tree per 25 feet of street frontage. | _____ |
| | j. Incorporates existing trees in landscape design. | _____ |

| | | |
|---|---|---|
| 7. | **ARCHITECTURAL DESIGN** | |
| | a. Building materials are natural, i.e. wood or stone. | _____ |
| | b. Pitched roof with a minimum 3:12 pitch. | _____ |
| | c. Exceeds the state energy code requirements by:<br>• Twenty-five (25) percent = One (1) point<br>• Fifty (50) percent = Two (2) points<br>• More than seventy-five (75) percent = Three (3) points | _____ |
| | d. The use of alternative energy sources, for example: photovoltaic, solar, geothermal, wind. | _____ |
| | e. Each building up to seventy-five (75) feet in length contains four (4) facade relief elements; | _____ |
| | f. Each building of seventy-five to one hundred fifty (75-150) feet in length contains five (5) facade relief elements; | _____ |
| | g. Each building exceeding one hundred fifty (150) feet in length contains six (6) facade relief elements;<br>**Facade relief elements**<br>• Two (2) or more colors<br>• Natural earth toned colors<br>• Substantial fenestration using windows, doors, or other openings<br>• Two (2) or more materials that break up the mass of the structure<br>• Articulation of the parapet walls<br>• Change in wall plane<br>• Change in roof plane<br>• Extended roof overhangs | _____ |
| | h. Significant variation in building masses and/or forms | _____ |
| 8. | **SIGNAGE** | |
| | a. Signage is not internally illuminated. | _____ |
| | b. Monument signs used in lieu of pole signs. | _____ |
| | c. Area of signage is at least twenty (20) percent less than total area allowable for each sign type. | _____ |
| | d. Maximum sign height does not exceed one-third (1/3) the maximum height of the building(s). | _____ |
| | e. Comprehensive sign plan. | _____ |
| 9. | **MIXED USE** | |
| | One point will be given for each building that contains two (2) or more of the following uses:<br>• Office | _____ |

| | | |
|---|---|---|
| | • Retail<br>• Personal services<br>• Residential<br>• Hotel<br>• Medical<br>• Entertainment<br>• Restaurant | |
| | **TOTAL POINTS** | _____ |

(Ord. No. 04-5310, § 1, 12-13-04)

### SEC. 27-1425. REEXAMINATION OF REGULATIONS.

After one (1) year of the effective date of this article, and periodically afterwards, these regulation shall be reviewed for their effectiveness and the practicality of implementation and enforcement.

(Ord. No. 04-5310, § 1, 12-13-04)

### SEC. 27-1426. APPEAL PROCESS.

An appeal may be made by any applicant aggrieved by a denial of a Shiloh corridor overlay zone permit by the planning and community services department. The applicant shall first appeal to the department director, and if not satisfied with the director's determination, may then file an appeal with city council. The city council shall hold a public hearing and make a determination whether to approve or deny the permit. Before either the director or city council makes a determination on the permit, the following criteria shall be considered:

(1) That the official erred in the interpretation or application of this chapter;

(2) That approving the permit will not confer on the applicant any special privilege that is denied by this chapter to other land in the same district;

(3) That no substantial detriment to the public good is created;

(4) That the intent and purpose of this chapter is not impaired.

Upon receiving written notice of denial of a permit from the planning and community services department, the aggrieved applicant has fourteen (14) days from the date on the notice to submit a written request for appeal to the department director. The director shall meet with the applicant within five (5) days of receiving the request and issue a determination on the decision to deny the permit. If the department director upholds the decision to deny, the applicant may file, within fourteen (14) days from the date of the director's determination, a request for appeal before the city council. If an appeal is requested, the planning and community service director shall:

(1) Submit a staff report to the city council within thirty (30) days after receipt of the appeal scheduling a public hearing and describing the nature of the appeal. The memo shall include the request for the appeal and a copy of the notice stating reason(s) for the denial of the permit.

(2) Place notice of the time, date and place of the public hearing in a newspaper of general circulation fifteen (15) days in advance of the date set for the public hearing.

(3) Notify, by mail, the party requesting the appeal and all adjacent property owners of the time, date and place of the public hearing and nature of the appeal five (5) days in advance of the public hearing.

Upon reversing a decision to deny a permit, the council may prescribe appropriate conditions and safeguards in conformity with this chapter. Violation of such conditions and safeguards, when made a part of the terms upon which the appeal is granted, shall be deemed a violation of this chapter.

Under no circumstances shall the council issue a decision that would allow a use not permitted under the terms of this chapter in the district involved. Approval of a permit shall not be a grant of special privilege inconsistent with limitations placed upon other property in the district.

(Ord. No. 04-5310, § 1, 12-13-04)

## ARTICLE 27-1400. SHILOH CORRIDOR OVERLAY DISTRICT

### SEC. 27-1427. SOUTH SHILOH CORRIDOR OVERLAY DISTRICT.

### SEC. 27-1428. PURPOSE.

The purpose of the South Shiloh corridor overlay district is to provide standards for industrial, commercial, and mixed-use development as called for in the West Billings Plan. This overlay zoning district is intended to promote an aesthetically pleasing and distinct entryway corridor by encouraging abundant landscaping, attractive building design, and preservation of scenic vistas. Single family and duplex residential development are exempt from the requirements of this overlay zoning district. The overlay zoning does not alter the category of permitted uses in the underlying zoning.

(Ord. No. 05-5314, § 1, 1-24-05)

### SEC. 27-1429. DISTRICT BOUNDARIES.

The boundaries of the South Shiloh corridor overlay district shall be that displayed on the map at the end of section 27-1430. In no case shall the boundaries of the district exceed a depth of five hundred (500) feet from the centerline of the right-of-way of Shiloh Road from King Avenue south to Interstate 90 and Zoo Drive from Interstate 90 to the intersection of Shiloh Road. If only a portion of the property falls within the boundaries of the district, the entire property will be subject to the regulations in section 27-1500.

(Ord. No. 05-5314, § 1, 1-24-05)

### SEC. 27-1430. REVIEW CRITERIA.

(a) *Generally.* The South Shiloh corridor overlay district review process is a review of development proposals against a set of absolute and relative criteria. Site and development plans are evaluated to determine whether the proposed development meets the identified criteria. If the criteria are met, the development may proceed.

New developments and existing development in which the gross floor area (GFA) or the number of parking stalls is increased by twenty-five (25) percent must comply with these regulations.

(b) *Absolute criteria.* A developer must meet all absolute criteria to obtain planning and community services department approval. The absolute criteria are defined in sections 27-1506 through 27-1508. Absolute criteria also include all other applicable codes, ordinances, and statutes, including, but not necessarily limited to, minimum engineering and building standards, public service and utility requirements, and environmental regulations.

(c) *Relative criteria.* Relative criteria are the "points" of the review process. Each development must obtain a specified minimum number of points based on the relative criteria identified in section 27-1509. The development plans are evaluated against the relative criteria and scored on a point chart.

(Ord. No. 05-5314, § 1, 1-24-05)

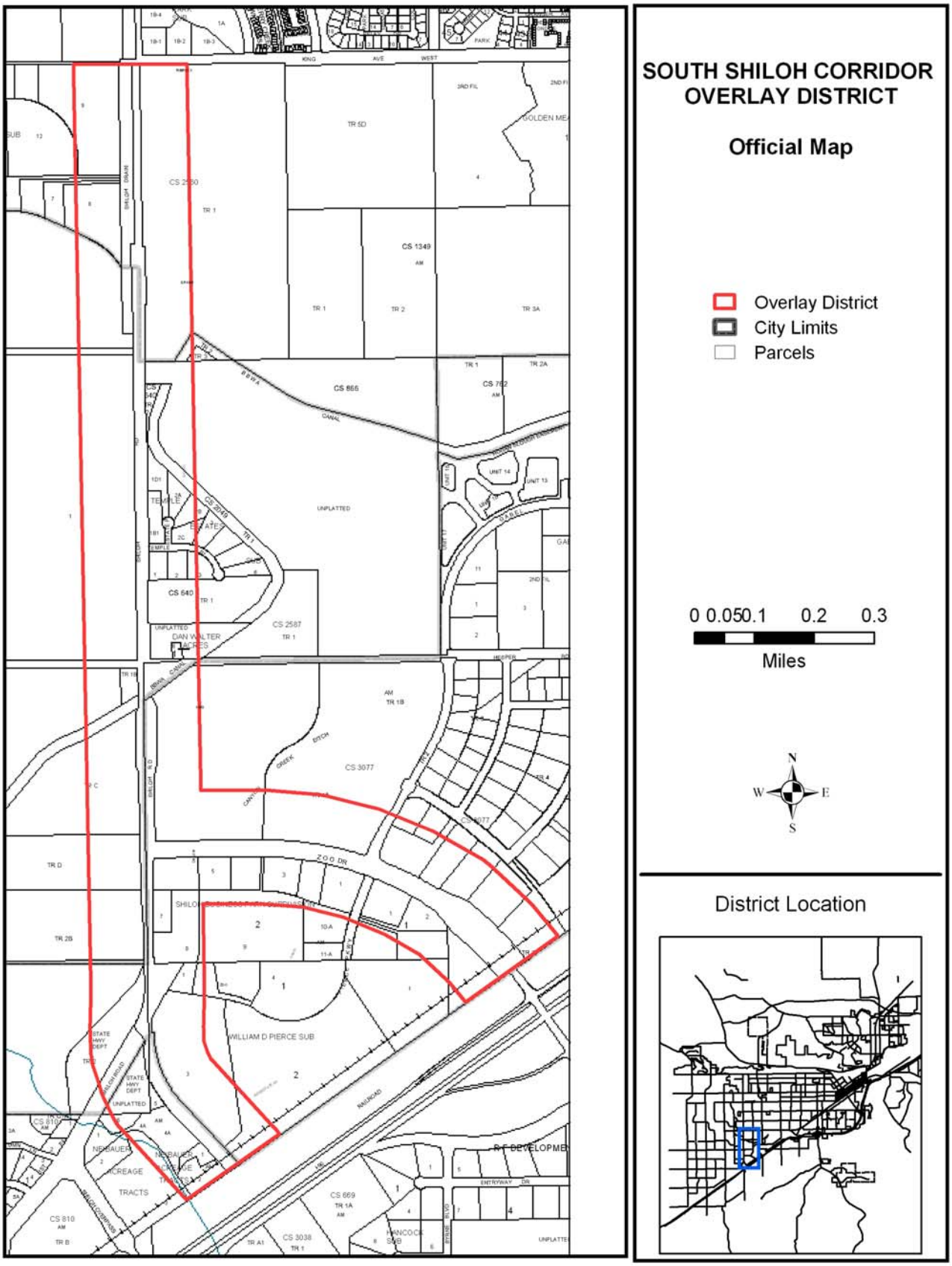
SOUTH SHILOH CORRIDOR OVERLAY DISTRICT
Official Map
Overlay District
City Limits
Parcels
0 0.050.1 0.2 0.3
Miles
N
W
E
S
District Location
KING AVE WEST
CS 1349
CS 865
CS 640
CS 2587
CS 3077
ZOO DR
WILLIAM D PIERCE SUB
RAILROAD
CS 669
CS 810
CS 3038
UNPLATTED

**SEC. 27-1431. APPLICATION AND APPROVAL PROCESS.**

(a) *Approval required.* If the development is within the city limits, a building permit must be applied for from the city building division. Planning department approval is required prior to construction. If the development is outside the city limits, a zoning compliance permit must be applied for from the planning and community services department. Planning department approval is to ensure compliance with the zoning regulations. This does not in anyway imply approval by any other city or county department.

(b) *Content of application.* Each application for development located in the South Shiloh corridor overlay district shall include the following:

(1) The name and address of the property owner and applicant, if different;

(2) The legal and general description of the tracts or lots upon which review is sought;

(3) A statement of proposed use;

(4) A complete site development plan drawn to scale of no less than one (1) inch = forty (40) feet indicating:

a. Plans for landscape development, including irrigation, drainage, grading, and planting detail showing species, size and spacing of trees and shrubs and percent of living and non-living material;

b. Dimension and location of all existing and proposed buildings, recreation areas, utility and service areas, trash storage area, fire hydrants, access drives, full width of street and adjacent drives, parking areas, existing utility lines, and easements;

c. Dimension, location and description of all other existing and proposed site improvements including fences, walls, walkways, patios, decks, and barriers;

d. A clear delineation of all areas to be paved or surfaced, including a description of surfacing materials to be used;

e. Location and description of all off-site improvements and right-of-way dedication; and,

f. Location and type of lighting, including a scaled or dimensioned elevation of each type of lighting fixture, and the maximum illumination measured in foot-candles at the property line.

g. Information describing how sound suppression will be accomplished when property is adjacent to residential use.

(5) Building plans drawn to a scale of no less than one-sixteenth inch ( 1/16) = one (1) foot. for all structures, including architectural plans for proposed buildings complete with exterior finishes and including floor plans and elevations.

(6) A signage plan describing specifications and location of all signage. A separate application and approval shall be required for all signs;

(7) A timetable for the proposed construction project; and

(8) A complete form showing compliance with the relative criteria and points assigned (see section 27-1424);

(9) Any other information pertinent to the particular project which, in the opinion of the zoning coordinator, is determined to be necessary for the review of the project.

(Ord. No. 05-5314, § 1, 1-24-05)

**SEC. 27-1432. DEFINITIONS.**

Terms not specifically defined in this chapter shall have the same meanings as defined in sections 27-201 and 27-1104. The standard dictionary meaning shall be applied to terms not otherwise defined.

(Ord. No. 05-5314, § 1, 1-24-05)

**SEC. 27-1433. ABSOLUTE CRITERIA.**

(a) *Development standards.*

(1) *Shiloh Road and Zoo Drive frontage setbacks.* The minimum frontage setback from the property line along Shiloh Road and Zoo Drive for all developments excluding residential single family or duplex shall be twenty (20) feet. The clear vision triangle will be maintained as required in section 27-615. Side and rear building setbacks shall be the same as the underlying zoning district. All arterial setbacks as outlined in section 27-602 must also be maintained.

(2) *Other regulations.* All other city and county codes shall apply, including but not limited to the following: building, zoning, site development, parking and drainage regulations that are not directly addressed in this chapter. Where requirements are addressed in both this section and other codes, those in this section apply.

(3) *Sidewalks.* All sidewalks along internal platted streets shall be boulevard walks. The boulevard shall be at least five (5) feet wide and landscaped. The landscaping shall contain ground cover such as sod, shrubs, flower beds or living plant material. River rock, bark chips, flagstones or similar non-living material may be used as mulch or decorative landscape features to supplement the living plant material. No more than twenty-five (25) percent of the landscaped area shall contain non-living material. There shall be at least one (1) canopy tree per every forty (40) linear feet.

(b) *Landscaping standards.*

(1) *Shiloh Road and Zoo Drive frontage setback landscaping required.* All developments are required to landscape the frontage setback adjacent to and along the length of Shiloh Road and Zoo Drive, excluding driveways. Frontage setbacks shall be landscaped with a minimum of five (5) canopy or evergreen trees and ten (10) shrubs per one hundred (100) feet of frontage. Trees may be massed within the frontage setback as long as the same densities are maintained.

(2) *Right-of-way frontage other than Shiloh Road and Zoo Drive landscaping required.* All developments are required to landscape the frontage setback adjacent to and along the length of all rights-of-way other than Shiloh Road, excluding driveways. Right-of-way frontage setbacks shall be landscaped with a minimum of four (4) canopy or evergreen trees and eight (8) shrubs per one hundred (100) feet of frontage. Massing of landscaping elements with the required number of landscaping is permitted to meet the intent of subsection (b)(1).

(3) *Off-street parking lot landscaping.*

a. A minimum of twenty (20) square feet of internal landscaping shall be provided for each parking space.

b. Two (2) canopy and/or evergreen trees and five (5) shrubs shall be required for every nine (9) parking spaces.

c. The shortest dimension of any parking lot landscaped area shall not be less than five (5) feet.

d. Internal parking lot landscaping shall be proportionately dispersed, at the developer's discretion, in order to define aisles and limit unbroken rows of parking. The maximum unbroken distance in any direction shall be limited to one hundred fifty (150) feet. See section 27-1106 for additional requirements.

e. Trees and shrubs may be massed.

(4) *Commercial uses abutting residential and public uses.* All commercial or industrial uses shall be separated from abutting, including across an alley, residential single family, duplex and public uses by a fifteen (15) foot wide bufferyard. The bufferyard shall be landscaped with a minimum of five (5) canopy or evergreen trees and ten (10) shrubs per one hundred (100) linear feet. If the adjacent land use is a vacant building or ground, then the zoning shall be used in place of the land use.

A solid fence or wall that is architecturally similar in color and design shall be required on the property line. The fence shall be a minimum of six (6) feet high. Chain link or other wire fencing material is prohibited. All fences shall be maintained by the commercial property owner.

(5) *Non-living material allowed.* River rock, bark chips, flagstones or similar material may be used as mulch or decorative landscape features to supplement the living plant material. Bufferyards may include boulevard sidewalks. No more than twenty-five (25) percent of the landscaped area shall contain non-living material.

(6) *Landscape maintenance required.* All landscaped areas shall be irrigated, maintained and kept free of weeds, debris and litter. Dead or dying material shall be replaced within one (1) year.

(7) *Protection of landscaped areas.* Landscaped areas within parking lots or along the perimeter of the property must be protected from vehicular traffic through the use of continuous concrete curbs, extruded asphalt or other approved barriers.

(8) *Landscape exemptions.* Uses for automobile and recreation vehicle sales are exempt from the tree requirements in the interior of their lots only as long as the required trees are replaced with shrubs and/or other landscape features, including but not limited to water features, landscape rock, public art, etc. If no landscaping is provided in the interior of lots, at least one (1) additional tree and two additional shrubs per five hundred (500) feet of frontage should be provided in perimeter landscape to offset the exemption. This landscaping may also be massed.

(9) *Plant standards.*

a. *Canopy tree.* A species of tree that normally bears crown foliage no lower than six (6) feet above ground level upon maturity. Minimum size of canopy trees shall be at least two (2) inches in caliper at the time of installation. Caliper shall be defined by the American Nurseryman Standard Definition.

b. *Evergreen.* A tree or shrub of a species that normally retains leaves/needles throughout the year. Minimum size of evergreen trees shall be five (5) feet in height at the time of installation.

c. *Shrubs.* The minimum size of a shrub shall be at least five (5) gallons.

d. *Recommended tree types.* It is recommended that the developer work with the city parks department, county extension agent, a local greenhouse operator, landscape architect or other professional designer to determine the species of trees that are most suitable for each situation. The use of native, drought tolerant plant materials is strongly encouraged. Evergreen trees are discouraged for internal parking areas if they limit sight lines. The planting of trees should be done in such a manner as

to provide maximum solar efficiency throughout the site. A list of recommended plant material shall be available at the planning department.

e. *Fractions in the calculations of number of trees and shrubs.* In the calculation of trees and shrubs for bufferyards or parking landscaping, fractions of less than five-tenths (.5) shall be rounded down to the nearest whole number; fractions five-tenths and more (.5) shall be rounded up to the nearest whole number.

(Ord. No. 05-5314, § 1, 1-24-05)

**SEC. 27-1434. BUILDING DESIGN STANDARDS.**

(a) *Materials.* All buildings shall be completed on all sides with an acceptable finishing material. The following materials are acceptable: brick, fluted block, colored textured block, glass, stucco, architectural metal panels with covered fasteners, exterior insulation and finishing systems (i.e., Dryvit, etc.), stone, wood, and integrally colored or exposed aggregate concrete. Exposed-seam metal buildings shall be prohibited unless covered with an acceptable finishing material.

(b) *Roofs.* Roofs exposed to view shall be finished with a durable material that is architecturally coordinated in color and design with the building material. Recommended materials include: standing seam, dimensional asphalt shingles, shakes or shingles. Other types or styles of roofing materials that are consistent with this chapter may be approved by the zoning coordinator or his/her designee. Pitched roofs are encouraged wherever possible.

(c) *Mechanical equipment.* Mechanical equipment, placed at ground level or on a roof, shall be screened. The screening shall be at least the height of the mechanical equipment. Sound suppression/abatement shall be provided when mechanical equipment is installed on property that is adjacent to residential uses or zoning districts.

(d) *Elevations and facades.* Buildings shall incorporate one or more of the following: recesses, off sets, angular forms, or other architectural features such as bell towers or clock towers to provide a visually interesting shape. The break in facade shall be a minimum of twelve (12) feet in length and with a minimum protrusion or recess of four (4) feet. Buildings shall incorporate a break in the architectural facade at least every sixty (60) feet. It is encouraged that each offset area contain landscaping or other similar amenities that will complement the offset area.

(Ord. No. 05-5314, § 1, 1-24-05)

**SEC. 27-1435. ADDITIONAL PROVISIONS.**

(a) *Storage of merchandise.* Any permitted storage of merchandise outside an approved building shall be within an area enclosed with a sight obscuring fence at least six (6) feet in height that is architecturally coordinated in color and design with the building. However, vehicle sales lots and plant materials may be displayed outside of an approved building or enclosed area so long as they are on the same site wherein the business displays the bulk of its goods for sale. Outside promotional displays are allowed during business hours only. Bufferyards or required landscaping shall not be used for the displaying of merchandise. Chain link and other types of wire fencing are prohibited.

(b) *Area lighting.*

(1) All outdoor pole lighting shall be fully shielded cut off fixtures with recessed lamps (no light emitted by the fixture is projected above the horizontal plan of the fixture, and no dropped lenses) and mounted at heights no greater than twenty (20) feet above grade.

(2) All outdoor lighting, except street lights, shall be located and aimed or shielded so as to minimize stray light trespassing across property boundaries and no more than one and one-half (1.5) foot candles as measured vertically at the lot line.

(c) *Canopy, marquee and "wall pack" lighting.* Canopy, marquee and "wall pack" lighting shall be fully shielded with recessed lamps. No internally illuminated fascia shall be allowed.

(d) *Storage of junk.* No person shall store junk, partially or completely dismantled vehicles, or salvaged materials outside a building. In the case of repair shops, such material must be enclosed within a building or an area having a sight-obscuring fence at least six (6) feet in height. Chain link or other type of wire fencing is prohibited.

(e) *Waste storage area.* All solid waste storage shall be located within an area enclosed with a solid, masonry wall that is architecturally coordinated in color and design with the building. The following materials are acceptable: brick, fluted block, colored textured block, glass, stucco, architectural metal panels with covered fasteners, exterior insulation and finishing systems (i.e., Dryvit, etc.), stone, wood, and integrally colored or exposed aggregate concrete. Exposed-seam metal buildings shall be prohibited unless covered with an acceptable finishing material. Solid waste enclosures are encouraged to be landscaped.

(Ord. No. 05-5314, § 1, 1-24-05)

### SEC. 27-1436. DEVELOPMENT FEATURES REQUIRED TO EARN POINTS (RELATIVE CRITERIA).

In accordance with section 27-1430, each application for development in South Shiloh corridor overlay district must score a minimum number of points based on the relative criteria described below. Design elements are listed under nine (9) category headings. A project shall earn one(1) point for each design element that it incorporates. At least one (1) point shall be earned from six (6) out of the nine (9) categories listed. The developer must attain a minimum of fifteen (15) points.

(1) *Site development.*

a. Pavement along Shiloh and Zoo frontage setback is less than or equal to thirty-five (35) feet.

b. Construct one or more public use spaces such as mini-parks, water feature, playfields or playgrounds, rest areas, for example.

(2) *Access.*

a. A transit or school bus stop.

b. Easement granted for bike path or pedestrian trail other than sidewalk. The easement must be in addition to what is required by the subdivision regulations.

c. Construction of bike path or pedestrian trail other than sidewalk (one (1) point for each fifty (50) feet of ten (10) foot wide concrete or comparably durable hard surface pathway, four (4) points maximum).

d. Provision for internal access between lots.

e. A single approach onto a public road that serves multiple lots.

(3) *Lighting.*

a. Light spill over limits of less than one and one-half (1.5) foot candles.

b. Continuity of lighting fixture design with adjacent properties.

c. Incorporate outdoor light fixtures at heights less than twenty (20) feet.

(4) *Parking.*

a. A joint use parking agreement.

b. Parking provided does not exceed one hundred twenty-five (125) percent of required spaces.

c. Landscaping internally integrated in parking areas and/or sales area.

d. Parking lots placed at the rear and/or side of the building, none in front.

(5) *Scale.*

a. The mass and scale does not exceed that of the surrounding development by more than ten (10) percent.

b. The height of structures does not exceed that of the surrounding development by more than ten (10) percent.

c. The building size does not exceed that of the surrounding development by more than ten (10) percent.

(6) *Landscaping.*

a. Buildings have landscaping immediately adjacent to a building.

b. Landscaping exceeds the minimum number of trees and shrubs that are required by ten (10) percent each.

c. Landscaping material exceeds minimum caliper width by one (1) inch or fifty (50) percent additional height required.

d. Drought tolerant tree, shrub and grass species requiring a significant reduction of water use.

e. Terraced or bermed site design.

f. Stormwater retention areas include significant landscaping.

g. Bufferyards larger than required by at least ten (10) percent.

h. Continuity of landscaping features at interface with adjacent property.

i. Canopy trees placed in the boulevard along all streets except Shiloh Road and Zoo Drive, at one (1) tree per twenty-five (25) feet of street frontage.

j. Installation of a curvilinear boulevard walk.

k. Incorporates existing trees in landscape design.

(7) *Architectural design.*

a. Building materials are natural, i.e. wood or stone.

b. Pitched roof with a minimum 3:12 pitch.

c. Exceeds the state energy code requirements by:

Twenty-five (25) percent = One (1) point

Fifty (50) percent = Two (2) points

More than seventy-five (75) percent = Three (3) points

d. The use of alternative energy sources, for example: photovoltaic, solar, geothermal, wind.

e. Each building up to seventy-five (75) feet in length contains four (4) facade relief elements;

f. Each building of seventy-five (75) to one hundred fifty (150) feet in length contains five (5) facade relief elements;

g. Each building exceeding one hundred fifty (150) feet in length contains six (6) facade relief elements;

**Façade relief elements**

1. Two (2) or more colors.
2. Natural earth toned colors.
3. Substantial fenestration using windows, doors, or other openings.
4. Two (2) or more materials that break up the mass of the structure.
5. Articulation of the parapet walls.
6. Change in wall plane.
7. Change in roof plane.
8. Extended roof overhangs.
9. Significant variation in building masses and/or forms.

(8) *Signage.*

a. Signage is not internally illuminated.

b. Monument signs used in lieu of pole signs.

c. Area of signage is at least twenty (20) percent less than total area allowable for each sign type.

d. Maximum sign height does not exceed one-third ( 1/3) the maximum height of the building(s).

e. Comprehensive sign plan (See also section 27-1517).

(9) *Mixed use.* One point will be given for each subdivision or building that contains two (2) or more of the following uses:

a. Office.

b. Retail.

c. Personal services such as dry cleaner, laundromats, beauty salons.

d. Residential.

e. Hotel/motel.

f. Medical.

g. Entertainment.

h. Restaurant.

(Ord. No. 05-5314, § 1, 1-24-05)

**SEC. 27-1437. SIGNAGE STANDARDS--PURPOSE, INTENT, AND SCOPE.**

The purpose and intent of this section is to promote commerce, traffic safety, and community identity while improving the visual environment of residential, commercial, and industrial areas.

This section of the Code shall not regulate traffic and directional signs installed by a governmental entity or in a private parking lots; signs not readable from nor intended to be viewed from a public right-of-way; merchandise displays; point-of-purchase advertising displays, such as product dispensers; national flags; flags of a political subdivision; symbolic flags of an institution; legal notices

required by law; barber poles; historic site monuments/plaques; gravestones; structures intended for a separate use, such as phone booths, donation and recycling containers; lettering or symbols applied directly onto or flush-mounted magnetically to a motor vehicle operating in the normal course of business.

(1) *Permits required.* Any on-premise sign shall hereafter be erected, re-erected, constructed, painted, posted, applied or structurally altered in accordance with this chapter and pursuant to a sign permit issued by the planning and community services department. A sign permit shall be required for each group of signs on a single supporting structure installed simultaneously. Thereafter, each additional sign erected on the structure must have a separate sign permit. The owner of a sign shall produce a permit upon request. Within fifteen (15) working days following the submittal of a complete sign permit application, the zoning coordinator or his/her designee shall approve or deny the application, unless the applicant consents in writing to an extension of the review period. In the event that review exceeds fifteen (15) days, the applicant may seek immediate approval from the planning director. If an application is determined to be incomplete, the applicant shall be notified within five (5) days of the submittal. Should the application be denied, the applicant shall be notified in writing specifying all areas of noncompliance with this section.

(2) *Permit applications.* All permit applications for signs shall include a site plan that provides the following information:

a. The location of the affected lot, building and sign;

b. The scale of the site plan;

c. A drawing of the proposed sign or sign revision, including size, height, copy, structural footing details, method of attachment and illumination;

d. All existing signs on the site including their size and height; and

e. The legal description of the parcel.

(Ord. No. 05-5314, § 1, 1-24-05)

**SEC. 27-1438. DEFINITIONS.**

The definitions used in this chapter may be found below and in section 27-703 of the city sign regulations or article X of the Yellowstone County Sign Regulations.

*Bulletin board* means a sign which identifies an institution or organization on the premises on which it is located and which contains the name of the institution or organization, the names or individuals connected with it, or general announcements of events or activities or similar messages.

*Electronically changeable message sign* means a computer programmable, microprocessor controlled electric display utilizing a means of illumination (light bulb, LED, fiber optics, etc) upon which alphanumeric characters, graphics, electronic animations, symbols and words can be displayed, such as a programmable display system. Message and symbols that have the capability of alternating, traveling and animating along with any other of a variety of change, appear and disappear methods are allowed.

*Flashing sign* means an electrical sign or portion thereof which changes light intensity in a brief, brilliant, or sudden and transient outburst of light causing a steady on and off, glittering, sparkling, or scintillating pattern.

*Incidental sign* means signs allowed under temporary use groups I and II, such as garage sale signs and banners.

*Individual business* means one business on one parcel provided that the parcel is not part of a multiple business complex; and also provided the parcel is not part of a group of multiple contiguous parcels under the same ownership.

*Monument sign* means a sign and supporting structure constructed as a solid structure or one that gives the appearance of a continuous, non-hollow, unbroken mass.

*Multiple businesses* means multiple businesses include businesses that may be located in a single building or in multiple buildings on a single site.

*Support structure(s)* means posts or columns and their anchors and bolts that structurally support the sign attached to it.

*Three-sided sign* means a sign with three (3) faces.

*Two-sided sign* means a sign with two (2) faces.

(Ord. No. 05-5314, § 1, 1-24-05)

**SEC. 27-1439. EXEMPT SIGNS.**

The following shall not require a sign permit, provided that these exemptions shall not be construed as relieving the owner from the responsibility to comply with the provisions of this Code or any other law or ordinance, including the International Building Code.

(1) The changing of the advertising copy or message on a lawfully erected sign that is currently in compliance with this section, reader board or similar sign specifically designed for replaceable copy.

(2) Painting, repainting or normal maintenance, unless a structural or electrical change is made.

(3) Temporary banners and temporary signs as permitted herein.

(4) Real estate sign as permitted herein.

(5) Incidental signs.

(6) Political signs.

(7) Bench signs on city or county rights-of-way, provided approval has been granted for the location by the appropriate city or county agency.

(Ord. No. 05-5314, § 1, 1-24-05)

**SEC. 27-1440. PROHIBITED SIGNS.**

The following signs are prohibited in all zones unless otherwise specifically permitted.

(1) Sign which by shape, wording or location resemble or conflict with traffic control signs or devices.

(2) Signs that create a safety hazard for pedestrian or vehicular traffic.

(3) Signs with special or auxiliary flashing lights which are not a part of the sign's message.

(4) Portable signs.

(5) Portable reader boards.

(6) Portable electric signs.

(7) Banner signs.

(8) Signs attached to or placed on a vehicle or trailer parked on public or private property, provided that this provision shall not be construed as prohibiting the identification of a firm or its product on a vehicle operating during the normal course of business. Franchised buses and taxis are exempt from these provisions.

(9) Roof signs.

(10) Billboards.

(11) Painted signs on buildings, including those attached on or to the surface of windows.

(Ord. No. 05-5314, § 1, 1-24-05)

**SEC. 27-1441. SIGNS PERMITTED IN ALL ZONES IN CONNECTION WITH SPECIFIC USES.**

The following signs may be permitted in any zone, subject to the limitations as provided herein.

(1) *Bulletin boards.* Bulletin boards may be permitted on the premises of public, charitable or religious institutions, subject to the following:

a. Such sign shall contain not more than thirty-two (32) square feet in area on a face and may be double-faced.

b. No part of the sign shall exceed a height of six (6) feet above the ground.

c. The sign, if lighted, shall use low-intensity lighting.

d. A thirty-two (32) square foot, double-faced sign, no higher than fourteen (14) feet above grade, is authorized for a public or private school on property not less than three (3) acres in size.

(2) *Temporary residential subdivision or area name signs.* A temporary real estate sign advertising the prospective sale or lease of a group of lots or dwellings within a tract, condominium, or apartment complex shall be permitted, subject to the following conditions:

a. The freestanding sign shall be located on the premises being sold or leased.

b. The sign shall not exceed forty (40) square feet in area on a face and may be double-faced.

c. The sign shall remain only as long as property remains unsold or unleased for the first time with the tract, but not to exceed one (1) year. The planning division may extend the one-year time period upon written request by the owners/developers of the project.

d. The sign shall be non-illuminated.

e. The top of the sign shall be no higher than ten (10) feet above grade of the lot or parcel on which the sign is located.

(3) *Permanent residential subdivision or area name signs.* Decorative subdivision or area name signs of a permanent character at the street entrance or entrances to the subdivision or area that identifies the name of the subdivision or area only are permitted, subject to the following conditions:

a. The sign shall consist of decorative building material with illuminated, indirectly lighted or non-illuminated name plates or letters, and be located in a maintained landscaped area; and

b. The wall and or sign shall not exceed six (6) feet above grade of the lot or parcel.

(4) *Contractor, architect, surveyor, or engineer signs.* One (1) on-premises sign identifying the project, developers, building contractor and/or subcontractors, architect, surveyor and engineer engaged in the construction is permitted on a property during the period of construction, provided that:

a. The sign is located on the parcel on which the construction is located.

b. The sign shall not exceed forty (40) square feet in area; and

c. The top of the sign shall not exceed ten (10) feet above grade of the lot or parcel on which the sign is located. The sign shall be removed prior to final building inspections. However, no such sign shall be maintained for a period in excess of twelve (12) months without approval from the planning department. The planning department may extend the one-year time period upon written request of the owners/developers of the project.

(5) *Real estate sign.*

a. *Residential and agricultural use or property.* One (1) temporary on-premise sign per frontage road, advertising the sale, lease or rental of the building, property or premises, is permitted on the property. Such sign shall be unlighted, no more than five (5) square feet and no higher than five (5) feet above grade. A thirty-two (32) square foot sign is allowed on agricultural property of twenty (20) acres or more, with or without a dwelling on site.

b. *Commercial and industrial use or property.* One (1) temporary on-premise sign advertising the sale, lease or rental of the building, property or premises is permitted on the property. Such sign shall be unlighted, no more than thirty-two (32) square feet and no higher than ten (10) feet above grade.

c. *Open house and directional sign.* For a. and b. above, an open house or directional sign shall be allowed on each street access street to the property. Signs shall not be placed in such a manner as to interfere with vehicular or pedestrian traffic, shall be used when the property is actually open for immediate inspections, shall be unlighted, and shall be no more than five (5) square feet and no higher than three (3) feet above grade.

(6) *Electronically changeable message sign.* Electronically changeable message signs shall be permitted in community commercial, highway commercial, controlled industrial, heavy industrial, entryway general commercial, and entryway light industrial zones in accordance with the standards of sections 27-1417 through 27-1423 and their definitions.

(Ord. No. 05-5314, § 1, 1-24-05)

**SEC. 27-1442. SIGN STANDARDS IN AGRICULTURAL (A-O) AND RESIDENTIAL (A-S, R-150, R-96, R80 R-70R R-70, R-60R, R-60, R-50, RMF, RMF-R, RMH) ZONES.**

(a) *Permitted signs by zone.* Sign structures are permitted in the agricultural and residential zones in accordance with the following uses and standards:

(1) A nameplate, which indicates no more than the name and address of the occupant of the premises, is permitted, provided that such sign shall not exceed a maximum area of five (5) square feet and a maximum height of four (4) feet above grade.

(2) A freestanding or wall sign identifying a community residential facility, family day-care home, child day-care center in a residence, nursery school, or similar institution is

permitted, provided that such sign shall not exceed a maximum area of five (5) square feet, a maximum height of four (4) feet above grade and is unlighted.

(b) *Permitted signs by use.*

(1) The standards in tables 1 and 2 apply to the following uses:

a. *Residential/semi-public* uses include a church, public park, multiple-family dwelling, dormitory, fraternity, sorority, nursing home, retirement apartment, public building, child day-care center, family day-care provider, non-profit community hall or lodge, animal clinic, cemetery, or sanitarium.

b. *School/public* uses include a school (kindergarten through university), hospital, police station, fire station, post office, or public golf course, incinerator, sold waste recycling transfer site, or landfills.

(2) *Wall signs.* On-premises wall signs are permitted, not to exceed the maximum number and size as shown in table 1. Wall signs shall be unlighted or have low-intensity lighting, and shall be placed flat against the outside wall of the main building.

| Use per Paragraph (b)(1) | Maximum Number of Signs | Maximum Sign Area |
|---|---|---|
| Residential/Semi-Public | 1 | 20 square feet |
| Schools/Public Use | 1 | 32 square feet |

Table 1--Wall Signs--Agricultural and Residential Zones

(3) *Freestanding signs.* On-premises freestanding signs are permitted, not to exceed the maximum number, size and height as shown in table 2. On-premises freestanding signs shall be unlighted or have low-intensity lighting.

| Use per Paragraph (b)(1) | Maximum Number of Signs | Maximum Sign Area | Maximum Sign Height |
|---|---|---|---|
| Residential/Semi-Public | 1 | 16 square feet | 6 feet |
| Schools/Public Use | 1 | 32 square feet* | 15 feet |

*Maximum sign area may be increased to forty-eight (48) square feet for monument signs seven (7) feet or less in height.

Table 2--Freestanding Signs--Agricultural and Residential Zones

(c) *Multiple arterials.* In the event the use or group of uses is adjacent to more than one (1) arterial, including through and corner lots, they will be allowed a freestanding sign exclusively oriented to the additional arterial. The above allowance shall be calculated independently, using only the additional arterial frontage. However, in no instance shall the square footage allowance from one (1) arterial be transferred to the other.

(Ord. No. 05-5314, § 1, 1-24-05)

**SEC. 27-1443. SIGN STANDARDS FOR BUSINESS AND INDUSTRIAL (RP, NC, CC, HC, CI, HI, ELG, EGC, EMU, ELI).**

(a) *Permitted signs by zone.* Sign structures are permitted in commercial and industrial zones in accordance with the following uses and standards.

(1) *Wall signs--Individual and multiple businesses.* Wall signs are permitted on each wall of a building provided the wall sign does not exceed twenty (20) percent of the total area of

the wall or a maximum of two hundred fifty (250) square feet, whichever provides the smaller area. Mansard roofs shall not be included when calculating the total area of the wall.

(2) *Freestanding signs (pole or monument design)--Individual businesses.* One (1) on-premises freestanding sign is permitted. Signs shall not exceed the area and height limits as provided in table 3.

(3) The maximum height of the on-premise sign may be increase to forty (40) feet above grade measured at the centerline of Shiloh Road or Zoo Drive, whichever is adjacent and the area may be increased to two hundred (200) square feet, provided the parcel is contiguous with Interstate 90 or Zoo Drive.

| Zoning District | Maximum Area <= 100' Street Frontage | Maximum Area >= 100' Street Frontage | Maximum Sign Height |
|---|---|---|---|
| RP | 50 square feet | 50 square feet | 15 feet |
| NC | 50 square feet | 50 square feet | 15 feet |
| CC | 80 square feet | 140 square feet | 20 feet |
| HC | 80 square feet | 140 square feet | 20 feet |
| CI | 80 square feet | 140 square feet | 20 feet |
| HI | 50 square feet | 50 square feet | 15 feet |
| ELC | 80 square feet | 120 square feet | 20 feet |
| EGU | 80 square feet | 140 square feet | 20 feet |
| EMU | 50 square feet | 50 square feet | 15 feet |
| ELI | 80 square feet | 140 square feet | 20 feet |

Table 3--Freestanding Signs--Commercial and Industrial Zones

(4) *Freestanding signs (pole or monument design)--Multiple businesses.*

a. Freestanding on-premises sign(s) for multiple businesses are permitted, not to exceed the number, area and height limits as provided in table 4.

b. Freestanding signage allowed for an individual business under subsection (a)(2) of this section shall not be combined with signage allowed for multiple businesses under this paragraph.

c. The minimum separation between signs shall be five hundred (500) feet, measured from the center of the sign.

| Zoning District | Maximum Number of Signs | Maximum Area | Maximum Sign Height |
|---|---|---|---|
| RP | 1 | 75 square feet | 15 feet |
| NC | 1 | 75 square feet | 15 feet |
| CC | 1 per 500 feet of street frontage* | 175 square feet | 20 feet |
| HC | 1 per 500 feet of street frontage* | 175 square feet | 20 feet |
| CI | 1 per 500 feet of street frontage* | 175 square feet | 20 feet |

| | | | |
|---|---|---|---|
| HI | 1 per 500 feet of street frontage* | 75 square feet | 15 feet |
| ELC | 1 per 500 feet of street frontage* | 150 square feet | 15 feet |
| EGU | 1 per 500 feet of street frontage* | 175 square feet | 20 feet |
| EMU | 1 | 75 square feet | 15 feet |
| ELI | 1 per 500 feet of street frontage* | 175 square feet | 20 feet |

*One (1) freestanding sign is permitted on parcels with less than five hundred (500) feet of lineal street frontage.

Table 4--Standards for on-premises signs for multiple businesses

(b) *Incentive to substitute height restricted monument signs for freestanding signs.*

(1) Monument signs, not to exceed seven (7) feet in height, may substitute for individual and multiple business signs under paragraphs (a)(2) and (3) with maximum sign number(s) and area(s) as provided in tables 5 and 6. There is no minimum separation requirement between signs.

| Zoning District | Maximum Number of Signs | Maximum Area/Each Sign |
|---|---|---|
| RP | 1 | 50 square feet |
| NC | 1 | 50 square feet |
| CC | 2 | 90 square feet |
| HC | 2 | 90 square feet |
| CI | 2 | 90 square feet |
| HI | 2 | 90 square feet |
| ELC | 2 | 80 square feet |
| EGC | 2 | 90 square feet |
| EMU | 2 | 50 square feet |
| ELI | 2 | 90 square feet |

Table 5--Standards for on-premises monument signs for individual businesses

*Two (2) freestanding signs are permitted on parcels with more than five hundred (500) feet of lineal street frontage.

| Zoning District | Maximum Number of Signs | Maximum Area/Each Sign |
|---|---|---|
| RP | 2 | 50 square feet |
| NC | 2 | 50 square feet |
| CC | 2 per 500 feet of street frontage* | 90 square feet |
| HC | 2 per 500 feet of street frontage* | 90 square feet |
| CI | 2 per 500 feet of street frontage* | 90 square feet |
| HI | 2 per 500 feet of street frontage* | 90 square feet |

| | | |
|---|---|---|
| ELC | 2 per 500 feet of street frontage* | 80 square feet |
| EGC | 2 per 500 feet of street frontage* | 90 square feet |
| EMU | 2 per 500 feet of street frontage* | 50 square feet |
| ELI | 2 per 500 feet of street frontage* | 90 square feet |

Table 6--Standards for on-premises monument signs for multiple businesses

(c) *Multiple arterials.* In the event the use or group of uses is adjacent to more than one (1) arterial, including through and corner lots, they will be allowed a freestanding sign exclusively oriented to the additional arterial. The above allowance shall be calculated independently, using only the additional arterial frontage. However, in no instance shall the square footage allowance from one arterial be transferred to the other.

(Ord. No. 05-5314, § 1, 1-24-05)

### SEC. 27-1444. COMPREHENSIVE SIGN PLAN.

For shopping centers, industrial parks, mixed use developments, and hotel conference centers; the zoning coordinator may approve a comprehensive sign plan that deviates from the provisions set forth in section 27-1416 above, provided the following standards and conditions are met:

(1) The development exceeds the following minimum square foot floor area requirements:

a. Two hundred fifty thousand (250,000) square feet for a shopping center or hotel conference center.

b. Two hundred fifty thousand (250,000) square feet of commercial/industrial floor space for a mixed use development.

c. Three hundred thousand (300,000) square feet for an industrial park.

(2) The applicant shall submit a sign plan that includes size, location, height, lighting, construction materials, and orientation of all proposed signs in addition to any other information deemed necessary by the staff.

(3) The sign plan shall conform to the standards of section 27-1416; except that a maximum of three (3) of the allowed signs under section 27-1416 may be allowed an increase of twenty (20) percent in sign height and area over the maximum allowed in the underlying zone.

(4) The sign plan shall be consistent with the Yellowstone County - City of Billings 2003 Growth Policy, the West Billings Master Plan, and the purpose and intent of this section, as determined by the zoning coordinator.

(5) The applicant/owner(s) shall sign a binding agreement ensuring compliance with the approved sign plan. The agreement shall be filed with the planning and community services department and shall apply to present as well as future property owners. All signage shall be installed in conformance with the approved sign plan.

(6) Modifications to the approved sign plan shall require reapplication and approval by the zoning coordinator.

(Ord. No. 05-5314, § 1, 1-24-05)

### SEC. 27-1445. SIGN LOCATION AND SETBACK.

(a) All signs shall be located so that they:

(1) Do not interfere with vehicular or pedestrian accessibility or sight distance;

(2) Conform to the provisions of section 27-615, the clear vision triangles and visibility at intersections; and

(3) No sign may encroach upon, or overhang, adjacent property or public right-of-way.

(b) All signs shall be located and set back as follows:

(1) Any portion of a freestanding sign shall be located a minimum of ten (10) feet back from any property line abutting a public right-of-way.

(2) The support structure of a monument sign shall be located a minimum of five (5) feet back from any property line abutting a public right-of-way.

(Ord. No. 05-5314, § 1, 1-24-05)

**SEC. 27-1446. SIGN AREA AND CALCULATION.**

(a) The sign area of a wall sign made up of letters, words or symbols shall be measured from the outside edge of the frame. The square footage of a sign composed of only letters, words or symbols shall be determined from imaginary straight lines drawn from high point to high point around the entire copy or grouping of such letters, words or symbols. Those portions that are an integral part of the sign display shall be considered in the determination of square footage allowed. An obvious border designed as an integral part of a sign shall be calculated in the total square footage allowed. All measurements for sign height shall be from the grade to the topmost part of the sign.

(b) Logos or identification symbols shall be considered signs and shall conform to all provisions of this section.

(c) The sign area of a freestanding sign shall be measured from the outside edge of the frame. The sign area of a freestanding sign consisting of more than one (1) sign shall be computed by adding together the total area(s) of all signs. Any portion of the sign not necessary for structural support of the sign or any structural support greater than two (2) feet in width shall be considered in the determination of the square footage of the sign. A fifty (50) percent increase in monument sign area is allowed for decorative framing or borders. Area calculation does not include decorative rocks or landscaping adjacent to a monument sign.

(d) The sign area for multiple-sided signs shall be calculated as follows:

(1) The total sign area for a two-sided sign shall be calculated using one (1) face, but the second face may not exceed the area of the first face.

(2) The total sign area for a three-sided sign shall be calculated using one (1) face, but the second and third face total area may not exceed the area of the first face.

(Ord. No. 05-5314, § 1, 1-24-05)

**SEC. 27-1447. MAINTENANCE OF SIGNS.**

(a) Any sign that has been approved or that has been issued a permit shall be maintained by the owner or person in possession of the property on which the sign is located. Maintenance shall be such that the signage continues to conform to the conditions imposed by the sign permit.

(b) Any damaged sign base shall be repaired within sixty (60) days.

(c) Any signage which has been damaged to such extent that it may pose a hazard to passersby shall be repaired or removed immediately.

(Ord. No. 05-5314, § 1, 1-24-05)

### SEC. 27-1448. NONCONFORMING SIGNS.

Nonconforming signs are those that were permanently installed and legally erected prior to the adoption of this Code. Nonconforming signs shall be allowed to continue in use so long as they are continuously maintained, are not relocated, and are not structurally altered or made more nonconforming in any way. If a sign is nonconforming and the copy is changed in any way or the sign is structurally altered, the sign shall be brought into conformance with these regulations.

(Ord. No. 05-5314, § 1, 1-24-05)

### SEC. 27-1449. LANDSCAPING FOR FREESTANDING AND MONUMENT SIGNS.

All freestanding and monument signs shall be located in a landscaped area. Landscaping should be appropriately sited to ensure that signs are not blocked or obscured by trees or bushes.

(Ord. No. 05-5314, § 1, 1-24-05)

### SEC. 27-1450. SIGN ILLUMINATION.

Externally illuminated signs shall have lighting confined to the sign with the light source positioned and shielded to eliminate spill over impacts to the surrounding area(s) in such a manner that it conforms to the site lighting standards. See subsection 27-1435(b). The light source for internally illuminated signs must be entirely enclosed within the sign. Internally illuminated signs shall be constructed with an opaque background and translucent letters and symbols. (Opaque means that the material must not transmit light from an internal illumination source.)

(Ord. No. 05-5314, § 1, 1-24-05)

## SHILOH CORRIDOR OVERLAY ZONE PERMIT

**Permit #_____**

### Application Information

Applicant Name: _____ Date: _____

Applicant Address: _____ Phone: _____

Property Owner Name (if different): _____

Property Owner Address: _____ Phone: _____

### Property Information

Property Address: _____

Section, Township, Range: _____ Zoning District: _____

Lot size: _____ sq. ft. Lot area covered by structure(s): _____sq.ft. _____%

Subdivision/COS: _____ Block: _____ Lot: _____

Proposed Use: _____

FOR OFFICE USE ONLY

Date Received _____

Number of relative criteria categories met: ____ Total number of points scored: _____

Approved _____ Denied _____ Date: _____

Reviewed By: _____

| RELATIVE CRITERIA | | |
|---|---|---|
| | • Applicant must obtain points from six (6) of nine (9) categories.<br>• Applicant must obtain 15 points: | |
| 1. | **SITE DEVELOPMENT**<br>a. Frontage pavement less than 35' along Shiloh Road and Zoo Drive<br>b. Public use space included | <br>_____<br>_____ |
| 2. | **ACCESS**<br>a. MET transit or school bus stop<br>b. Bikepath or pedestrian trail easement (above what subdivision requires)<br>c. Bikepath or pedestrian trail construction (1 point for each 50 feet, 4 points max)<br>d. Reciprocal access between lots<br>e. A single approach serving multiple lots | <br>_____<br>_____<br>_____<br>_____<br>_____ |
| 3. | LIGHTING<br>a. Light spill over limits of less than 1.5 foot candles .<br>b. Continuity of lighting fixture design with adjacent properties.<br>c. Incorporate outdoor light fixtures at heights less than twenty (20) feet. | <br>_____<br>_____<br>_____ |
| 4. | **PARKING**<br>a. Joint use parking agreement.<br>b. Parking does not exceed 125% of required spaces<br>c. Landscaping internally integrated in parking areas.<br>d. Parking lots placed at the rear and/or side of building – none in front. | <br>_____<br>_____<br>_____<br>_____ |

| | | |
|---|---|---|
| 5. | **SCALE** | |
| | a. Mass and scale of structures does not exceed that of the surrounding development by more than 10 percent. | _____ |
| | b. Height of structures does not exceed that of the surrounding development by more than 10 percent. | _____ |
| | c. Building size does not exceed that of the surrounding development by more than 10 percent`. | _____ |
| 6. | **LANDSCAPING** | |
| | a. Buildings have foundation planting. | _____ |
| | b. Landscaping exceeds minimum number of trees and shrubs that are required by ten (10) each. | _____ |
| | c. Landscaping material exceeds minimum caliper width by one (1) inch or fifty (50) percent additional height required. | _____ |
| | d. Drought tolerant tree, shrub and grass species requiring a significant reduction of water use. | _____ |
| | e. Terraced or bermed site design. | _____ |
| | f. Stormwater retention areas include significant landscaping. | _____ |
| | g. Bufferyards larger than required by at least ten (10) percent. | _____ |
| | h. Continuity of landscaping features at interface with adjacent property. | _____ |
| | i. Canopy trees placed in the boulevard along all streets except Shiloh Road and Zoo Drive at one tree per twenty 20 feet of street frontage. | _____ |
| | j. Installation of a curvilinear boulevard walk. | _____ |
| | k. Incorporates existing trees in landscape design. | _____ |
| 7. | **ARCHITECTURAL DESIGN** | |
| | a. Building materials are natural, i.e. wood or stone. | _____ |
| | b. Pitched roof with a minimum 3:12 pitch. | _____ |
| | c. Exceeds the state energy code requirements by:<br>• Twenty-five (25) percent = One (1) point<br>• Fifty (50) percent = Two (2) points<br>• More than seventy-five (75) percent = Three (3) points | _____ |
| | d. The use of alternative energy sources, for example: photovoltaic, solar, geothermal, wind. | _____ |
| | e. Each building up to seventy-five (75) feet in length contains four (4) facade relief elements; | _____ |
| | f. Each building of seventy-five to one hundred fifty (75-150) feet in length contains four (4) facade relief elements; | _____ |
| | g. Each building exceeding one hundred fifty (150) feet in length contains six (6) facade relief elements; | _____ |

| | | |
|---|---|---|
| | **Facade relief elements**<br>• Two (2) or more colors<br>• Natural earth toned colors<br>• Substantial fenestration using windows, doors, or other openings<br>• Two (2) or more materials that break up the mass of the structure<br>• Articulation of the parapet walls<br>• Change in wall plane<br>• Change in roof plane<br>• Extended roof overhangs<br>h. Significant variation in building masses and/or forms | _____ |
| 8. | **SIGNAGE**<br>a. Signage is not internally illuminated.<br>b. Monument signs used in lieu of pole signs.<br>c. Area of signage is at least twenty (20) percent less than total area allowable for each sign type.<br>d. Maximum sign height does not exceed one-third (1/3) the maximum height of the building(s).<br>e. Comprehensive sign plan. | _____<br>_____<br>_____<br>_____<br>_____ |
| 9. | **MIXED USE**<br>One point will be given for each building that contains two (2) or more of the following uses:<br>• Office<br>• Retail<br>• Personal services<br>• Residential<br>• Hotel<br>• Medical<br>• Entertainment<br>• Restaurant | _____ |
| | **TOTAL POINTS** | _____ |

(Ord. No. 05-5314, § 1, 1-24-05)

### SEC. 27-1452. REEXAMINATION OF REGULATIONS.

After one (1) year of the effective date of this article, and periodically afterwards, these regulation shall be reviewed for their effectiveness and the practicality of implementation and enforcement.

(Ord. No. 05-5314, § 1, 1-24-05)

### SEC. 27-1453. APPEAL PROCESS.

An appeal may be made by any applicant aggrieved by a denial of a Shiloh corridor overlay zone permit by the planning and community services department. The applicant shall first appeal to the department director, and if not satisfied with the director's determination, may then file an appeal with city council. The city council shall hold a public hearing and make a determination whether to approve or deny the appeal. Before either the director or city council makes a determination on the appeal, the following criteria shall be considered:

(1) That the official erred in the interpretation or application of this chapter;

(2) That approving the permit will not confer on the applicant any special privilege that is denied by this chapter to other land in the same district;

(3) That no substantial detriment to the public good is created;

(4) That the intent and purpose of this chapter is not impaired.

Upon receiving written notice of denial of a permit from the planning and community services department, the aggrieved applicant has fourteen (14) days from the date on the notice to submit a written request for appeal to the department director. The director shall meet with the applicant within five (5) days of receiving the request and issue a determination on the decision to deny the permit. If the department director upholds the decision to deny, the applicant may file, within fourteen (14) days from the date of the director's determination, a request for appeal before the city council. If an appeal is requested, the planning and community service director shall:

(5) Submit a staff report to the city council within thirty (30) days after receipt of the appeal scheduling a public hearing and describing the nature of the appeal. The memo shall include the request for the appeal and a copy of the notice stating reason(s) for the denial of the permit.

(6) Place notice of the time, date and place of the public hearing in a newspaper of general circulation fifteen (15) days in advance of the date set for the public hearing.

(7) Notify, by mail, the party requesting the appeal and all adjacent property owners of the time, date and place of the public hearing and nature of the appeal five (5) days in advance of the public hearing.

Upon reversing a decision to deny an appeal, the council may prescribe appropriate conditions and safeguards in conformity with this chapter. Violation of such conditions and safeguards, when made a part of the terms upon which the appeal is granted, shall be deemed a violation of this chapter.

Under no circumstances shall the council issue a decision that would allow a use not permitted under the terms of this chapter in the district involved. Approval of a permit shall not be a grant of special privilege inconsistent with limitations placed upon other property in the district.

(Ord. No. 05-5314, § 1, 1-24-05)

## ARTICLE 27-1500. CITY AND COUNTY ZONING COMMISSIONS AND CITY AND COUNTY BOARDS OF ADJUSTMENT

### SEC. 27-1501. CITY ZONING COMMISSION CREATED.

There is hereby created a City of Billings zoning commission to consist of five (5) members residing on property, any part of which lies within the limits of the City of Billings. The members are to be appointed by the mayor, subject to confirmation by the city council, for a term of four (4) years and the terms of the members shall be staggered so that a minimum number of terms shall expire in any one (1) year.

The members of said city zoning commission are required to attend all city zoning commission meetings advertised publicly, except in the case of an excused absence. The presence of three (3) members shall constitute a quorum.

The duties and powers of the city zoning commission shall be to recommend the boundaries of the various original districts and appropriate regulations to be enforced therein, and to hold public meetings and make recommendations to the city council on all requests to amend, supplement, change, modify or repeal the regulations, restrictions and boundaries in the zoning districts. The city council shall not hold its public hearing or take any action until it has received a final report from such commission.

(Ord. No. 97-5048, § 13, 12-22-97; Ord. No. 99-5081, § 1, 2-8-99)

### SEC. 27-1502. AMENDMENTS TO CHAPTER.

(a) *General.* This chapter, including the official zoning map, may be amended only by the city council but no amendment shall be finally approved by the city council unless it has been submitted to the city zoning commission for review and recommendation. Proposals to amend this chapter, including the official zoning map, may be initiated by the city council or by the board of planning. Proposals to amend this chapter, except for the official zoning map, may also be initiated by the city zoning commission. Before enacting an amendment to this chapter, the city council shall give public notice and hold a public hearing thereon. Before enacting on its own motion an amendment to the official zoning map, the city council shall provide written notification by mail of such amendment to each property owner whose name appears on the last tax record of the property subject to the amendment. The notification shall include what the proposed amendment is, the time, date and place of the public hearing on the proposed amendment. Such notification shall be made no less than fifteen (15) days nor more than thirty (30) days in advance of the date of public hearing.

(b) *Applications for map amendments.* Unless initiated by the city council or board of planning, all applications for official map amendments must be submitted by the owner of such property, the contract purchaser, or the authorized agent of the owner. An application for an amendment affecting the same property shall not be submitted more often than once every twelve (12) months. Each application to amend the official map shall be filed with the zoning coordinator, and each application shall be submitted under the following conditions:

(1) It shall include but not be limited to the following information:

a. A legal description of the tract(s) proposed to be rezoned;

b. A map showing the dimensions, acreage and location of the tract(s) being changed;

c. The names and addresses of the owner(s) of the land and their agents, if any, along with the recorded property owner's signature;

d. A certified list of the names, addresses and legal descriptions of the owners of property within a radius of three hundred (300) or more feet, as determined by the zoning coordinator, of the exterior boundaries of the tract(s);

e. Gummed mailing labels with the names and mailing addresses typed or printed neatly of all of the property owners indicated on the certified list; and

f. Payment of all applicable fees.

(2) An application for amendment to the official map shall be submitted at least twenty (20) days prior to the date of the public hearing before the city zoning commission.

(3) An application for a zone change may be withdrawn or amended as follows:

a. No application may be amended after the legal advertising, as required by below subsection (c) herein has been published.

b. An application may be withdrawn at any time prior to the publication of the legal advertisement for the public hearing before the city zoning commission without respect to the twelve (12) month waiting period. After legal notice for the city zoning commission has been published, the request for withdrawal shall be submitted to the planning department office at least twenty-four (24) hours prior to the public hearing. The city zoning commission may allow withdrawal of the application, after advertisement of the zoning commission public hearing has been published, by a majority vote of the members present, without prejudice with respect to the twelve (12) month waiting period after the application has first been submitted. After the city zoning commission hearing, a request for withdrawal shall be submitted to the city clerk and shall be submitted by the property owner or authorized agent, as listed on the application. The city council shall have exclusive authority to act on any request for withdrawal after notice of the city council public hearing has been published.

c. An applicant may withdraw an application for any particular property only once within the twelve (12) month period commencing with the submittal of the original application.

d. After withdrawal of an application, no new application for the same property shall be made until four (4) months after the date of withdrawal of the original application.

(c) *Planning department study and responsibility.* The zoning coordinator, upon receiving an application for rezoning of an area or a particular piece of property shall do the following:

(1) Consult with other departments of the city and/or county to fully evaluate the impact of any zoning change upon public facilities and services including but not limited to schools, drainage, traffic and related facilities;

(2) Study each application with reference to its appropriateness and effect on existing and proposed land use, and references to the comprehensive plan;

(3) In the case of a protest petition filed in the matter of any application for rezoning, determine the validity of such petition;

(4) Advertise notice of the application in a newspaper of general circulation at least fifteen (15) days in advance of the date of the city zoning commission public hearing. The notice shall contain: the classification sought, the location of the property, and the date, time and place of the city zoning commission public hearing;

(5) Notify, by mail, the applicant and/or his/her authorized agent at least five (5) days prior to the date of the city zoning commission public hearing of the date, time and place of such hearing;

(6) Notify, by mail, all property owners within three hundred (300) feet of the exterior boundaries of the property subject to the rezoning at least fifteen (15) days in advance of the time, date, place of the city zoning commission public hearing and the existing and proposed classification. The zoning coordinator may notify property owners within a radius of more than three hundred (300) feet if he/she determines that the proposed rezoning of the property would likely have a substantial impact on the surrounding land uses;

(7) Place notice of the city zoning commission public hearing on the property subject to rezoning at least fifteen (15) days in advance of the date of public hearing; and

(8) Report his/her findings and conclusions in writing to the city zoning commission, which report shall be a matter of public record.

(d) *City zoning commission action.* The city zoning commission shall review and take action upon each application in accordance with the provisions of this chapter, and after a public hearing at which the application has been legally advertised. Each application shall be presented to the city zoning commission by the zoning coordinator, together with his/her findings and conclusions on the matter. The city zoning commission may, by a majority vote of the members present, delay action for a period not to exceed thirty (30) days, without prejudice to the applicant. A report of the commission's decision and the zoning coordinator's findings and conclusions shall be submitted to the city council. The city zoning commission shall make a recommendation to the city council to:

(1) Deny the application; or

(2) Grant the application.

The city zoning commission shall submit its recommendations in writing along with a statement indicating its reasons for granting, denying, or recommending withdrawal of the amendment within fifteen (15) days following the public hearing. In no case shall the city zoning commission make a recommendation that an amendment be granted for an amendment that was not legally advertised.

In making its recommendation to the city council for an amendment to the official map or text of this chapter, the city zoning commission shall consider, among other things, the following:

(1) Whether the new zoning was designed in accordance with the comprehensive plan;

(2) Whether the new zoning was designed to lessen congestion in the streets;

(3) Whether the new zoning will promote health and general welfare;

(4) Whether the new zoning will secure safety from fire, panic and other dangers;

(5) Whether the new zoning will provide adequate light and air;

(6) Whether the new zoning will prevent the overcrowding of land;

(7) Whether the new zoning will avoid undue concentration of population;

(8) Whether the new zoning will facilitate the adequate provision of transportation, water, sewerage, schools, parks, fire, police and other public requirements;

(9) Whether the new zoning gives reasonable consideration to the character of the district;

(10) Whether the new zoning gives reasonable consideration to peculiar suitability of the property for particular uses;

(11) Whether the new zoning was adopted with a view to conserving the value of buildings; and

(12) Whether the new zoning will encourage the most appropriate use of land throughout the City of Billings.

The city zoning commission shall adopt such rules and regulations for the conduct of public hearings and meetings, which shall be published and available to the public, as well as conflict of interest rules, to ensure that no member is entitled to vote on a matter in which he/she has a direct or indirect interest.

(e) *City council public hearing.* Before taking action on an application for an amendment to the official map, and after presentation of the city zoning commission report, the city council shall hold a public hearing on the application.

As provided in Montana Code Annotated, Section 76-2-305(2) (1999). In the event of a protest petition against such zone change signed by the owners of twenty-five (25) percent or more of: (1) the area of the lots included in any proposed change; or (2) those lots one hundred fifty (150) feet from a lot included in a proposed change, such proposed amendment shall not become effective except by the favorable vote of two-thirds ( 2/3) of the present and voting members of the city council. The protest petition must be received in the planning department office by 5:00 p.m. on the Friday preceding the first reading of the amendment by the city council.

The recommendation of the city zoning commission and notice of the city council's upcoming public hearing on the first reading of the resolution/ordinance shall be published in an official paper or a newspaper of general circulation in the city. Fifteen (15) days after publication of such notice, a public hearing shall be held at the next regular meeting of the city council. An additional public hearing shall be held at second reading of the resolution/ordinance as required by section 2-223 of the Billings, Montana City Code.

(f) *City council action.* Before taking any action on an application for an amendment to the official map, or amendment to the text of this resolution/ordinance, the city council shall first consider the findings and recommendations of the city zoning commission. In no case shall the city council approve an amendment for a classification other than the one advertised. The city council shall:

(1) Approve the application;

(2) Deny the application;

(3) Allow withdrawal of the application; or

(4) Delay the application for a period not to exceed thirty (30) days.

When such proposed amendment has been denied by the city council neither it nor one involving the same tract shall be submitted for adoption within one (1) year after such denial.

(Ord. No. 97-5048, § 13, 12-22-97; Ord. No. 00-5114, § 1, 3-13-00)

## SEC. 27-1503. SPECIAL REVIEW BY CITY ZONING COMMISSION.

(a) *General.* Although each zoning district is primarily intended for a predominant type of use, there are a number of uses which may or may not be appropriate in a particular district depending upon all the circumstances of the individual case. For example, the location, nature of the proposed use, the character of the surrounding development, traffic capacities of adjacent streets, and potential environmental effects, all may indicate that the circumstances of the development should be individually reviewed. It is the intent of this chapter to provide a system of review of such uses so that the community is assured that the uses are compatible with their locations and with surrounding land uses, and will further the purpose of this chapter and the objectives of the comprehensive plan.

(b) *Application for special review; procedure.* An application for a special review may be filed by the property owner, contract purchaser, or his/her authorized agent. Such application shall be filed with the zoning coordinator and shall be submitted under the following conditions:

(1) The application shall include, but not be limited to the following information:

a. A legal and general description of the tract(s) upon which the special review use is sought;

b. A map showing the dimensions, acreage and location of the tract(s);

c. The names and addresses of the owner(s) of the tract and his/her agent, if any, along with the recorded property owner's signature;

d. A site plan showing major details of the proposed development including but not limited to: the location of proposed and existing buildings and structures; off-street parking and loading; service and refuse areas; means of ingress and egress; landscaping, screening, signs, and open space areas;

e. A certified list of the names, addresses and legal descriptions of the owners of property within a radius of three hundred (300) or more feet, as determined by the zoning coordinator, of the exterior boundaries of the tract(s);

f. Gummed mailing labels with the names and mailing addresses typed or printed neatly of all of the property owners indicated on the certified list;

g. The application must be accompanied by the payment of all applicable fees; and

h. Any other information the applicant believes will support his/her request or other information as requested by the zoning coordinator or planning department.

(2) The application must be submitted at least twenty (20) days prior to the date of the public hearing before the city zoning commission.

(3) An application may be withdrawn or amended at any time prior to the publication of the legal advertisement for the public hearing before the city zoning commission. After legal notice for the city zoning commission has been published, the request for withdrawal shall be submitted to the planning department office at least twenty-four (24) hours prior to the public hearing. The city zoning commission may allow withdrawal of the application, after advertisement of the zoning commission public hearing has been published, by a majority vote of the members present, without prejudice with respect to the twelve (12) month waiting period after the application has first been submitted. After the city zoning commission hearing, a request for withdrawal shall be submitted to the city clerk and shall be submitted by the property owner or authorized agent, as listed on the application. The city council shall have exclusive authority to act on any request for withdrawal after notice of the city council public hearing has been published.

(c) *Planning department action.* The zoning coordinator, upon receiving an application for a special review use shall do the following:

(1) Consult with other departments of the city and/or county to fully evaluate the impact of the use contemplated under the special review application upon public facilities and services;

(2) Study each application with references to its appropriateness and effect on existing and proposed land uses, and its relationship to the comprehensive plan;

(3) Advertise notice of the application in a newspaper of general circulation fifteen (15) days in advance of the date of the public hearing. The notice shall contain: the use proposed, the location of the property, and the date, time and place of the public hearing;

(4) Notify, by mail, the applicant and/or his/her authorized agent five (5) days prior to the date of the public hearing of the date, time and place of such hearing;

(5) Notify, by mail, all the property owners within three hundred (300) feet of the exterior boundaries of the tract subject to the special review, fifteen (15) days in advance of the time, date, place and proposed use. The zoning coordinator may notify property owners within a radius of more than three hundred (300) feet if he/she determines that the proposed use would be such as to have a substantial environmental impact on the surrounding land uses;

(6) Place notice of the public hearing on the property subject to the special review fifteen (15) days in advance of the public hearing; and

(7) Report his/her conclusions and findings, in writing, to the city zoning commission which report shall become a matter of public record.

(d) *City zoning commission action.* The city zoning commission shall consider each application in accordance with the provisions of this chapter, and at a public hearing at which time the application has been legally advertised. Each application shall be presented to the city zoning commission, by the zoning coordinator or his/her designee, together with his/her conclusions and findings on the matter. The city zoning commission may, by a majority vote of the members present, delay action for a period not to exceed thirty (30) days, without prejudice to the applicant. A written report of the commission's decision and recommendation and the zoning coordinator's report shall be submitted to the city council.

The city zoning commission shall make a recommendation to the city council to:

(1) Deny the application;

(2) Approve the application; or

(3) Conditionally approve the application.

Recommendations from the city zoning commission shall be based on findings of fact and shall be transmitted to the applicant or his/her agent, and the city council within fifteen (15) days of the date of the public hearing before the commission.

Before approving a special review use, the city zoning commission shall find that the contemplated use:

(1) Complies with all requirements of this chapter;

(2) Is consistent with the objectives and purposes of this chapter and the comprehensive plan; and

(3) Is compatible with surrounding land use or is otherwise screened and separated from adjacent land in such a way as to minimize adverse effects.

Further, the city zoning commission shall consider and may impose modifications or conditions concerning, but not limited to the following:

(1) Street and road capacity;

(2) Ingress and egress to adjoining streets;

(3) Off-street parking;

(4) Fencing, screening and landscaping;

(5) Building bulk and location;

(6) Usable open space;

(7) Signs and lighting; and/or

(8) Noise, vibration, air pollution and similar environmental influences.

(e) *City council action.* The recommendation of the city zoning commission shall be published in a newspaper of general circulation and at least fifteen (15) days after the first publication of such notice, a public hearing shall be held by the city council. Before taking any action on an application for a special review use, the city council shall first consider the findings and recommendations of the city zoning commission. In no case shall the city council approve a special review use other than the one advertised. The city council shall:

(1) Approve the application;

(2) Conditionally approve the application;

(3) Deny the application;

(4) Allow withdrawal of the application; or

(5) Delay the application for a period not to exceed thirty (30) days.

(Ord. No. 97-5048, § 13, 12-22-97)

## SEC. 27-1504. CLASSIFICATION OF NEWLY ANNEXED AREA.

(a) Annexations of land into the City of Billings may be effected under several statutory procedures. When a parcel of land is annexed to the city under any procedure except annexation by petition, the appropriate zone shall be determined as follows:

(1) Immediately subsequent to the adoption of resolution/ordinance of intent to annex, the zoning coordinator and planning staff will determine the most appropriate zone. They will work closely with the owner of the land. The land owner shall have adequate opportunity to have full input, but the final classification shall be made by the zoning coordinator and the planning staff.

(2) Upon determination of the classification the zoning coordinator shall follow the procedure set forth in above BMCC section 27-1502(C) except that the report, findings and conclusions shall be submitted to the city council prior to or concurrently with the services report that is required by the annexation statutes.

(3) A public hearing on the zoning classification shall be held concurrently with the public hearing on the annexation before the city council, provided that the hearing shall not be sooner than fifteen (15) days after notice of the proposed zone has been given.

(4) If the zoning classification is not approved by the city council, the land shall retain the zone classification it had in the county; provided, that if the county classification is not identical to the city classification the city classification established will be the closet equivalent zone.

(b) When the proposed annexation is by petition pursuant to MCA Title 7, Chapter 2, Part 46 (section 7-2-4601, et seq.), the petitioners shall, concurrently with the petition for annexation, make an application for change of zoning that the petitioner may desire. All fees shall be paid by petitioner upon filing the application for zoning. Upon filing the application, the zoning coordinator shall follow the procedure set forth in above Section 2. If no application is filed or the application is denied the land shall retain the same zone classification it had in the

county provided, that if the county classification is not identical, the city classification established will be the closest equivalent zone. The provisions of this subsection shall not be construed to preclude the city from fixing the zone classification as provided in subparagraph (a). hereinabove.

(Ord. No. 97-5048, § 13, 12-22-97)

**SEC. 27-1505. CITY BOARD OF ADJUSTMENT.**

(a) *Created.* There is hereby created for the City of Billings, a board of adjustment as provided by statute, consisting of seven (7) members appointed by the mayor, with the consent of the city council. The terms of each member shall run concurrent to that of the mayor's. Vacancies shall be filled for the unexpired terms of any members whose terms are interrupted for any reason.

(b) *Proceedings.* The city board of adjustment shall schedule regular meetings, along with special meetings which may also be called by the chairperson. The chairperson may cancel the regularly scheduled meeting if no matters are pending for the board's consideration. The chairperson, or in his/her absence, the acting chairperson may administer oaths and compel the attendance of witnesses. All meetings shall be open to the public.

The board shall keep minutes of its proceedings, showing the vote of each member, or if absent or failure to vote, indicating such fact, and shall keep records of its examinations and other official actions, all of which shall be a public record and shall be filed in the office of the Yellowstone County board of planning. Whenever the city board of adjustment grants an application for a variance, the minutes shall specifically state the hardship upon which the variance is granted. The official minutes of the board's proceedings shall be signed by the chairperson or acting chairperson. The decision of the board shall become effective immediately, unless otherwise directed by the board. The zoning coordinator in coordination with each board shall designate a secretary of the board and shall be custodian of all records of the meetings, findings, conclusions and orders of the board.

(c) *Hearings, appeals, notices.* Appeals to the city board of adjustment may be taken by any person aggrieved or by any officer, department, board or bureau of the city affected by any decisions of the administrative office made under the terms of this chapter. Such appeal shall be taken within a reasonable time, as provided by the rules of the board, by filing with the officer from whom the appeal is taken and with the city board of adjustment a notice of appeal specifying the grounds thereof. The officer from whom the appeal is taken shall forthwith transmit to the board all papers constituting the record upon which the action appealed was taken.

The city board of adjustment shall fix a reasonable time for the hearing of appeal, not to exceed thirty (30) days, give public notice thereof, as well as due notice to the parties in interest, and render a decision within a reasonable time, not to exceed ten (10) days thereafter. At the hearing, any party may appear in person or by agent or attorney.

(d) *Appeals; stay of proceedings.* An appeal stays all proceedings in furtherance of the action appealed from, unless the officer from whom the appeal is taken certifies to the city board of adjustment, after the notice of appeal shall have been filed with him/her, that by reason of facts stated in the certificate a stay would, in his/her opinion, cause imminent peril to life or

property. In such cases, proceedings shall not be stayed other than by a restraining order which may be granted by the city board of adjustment or by a court of record upon application to same and notice to the officer from whom the appeal is taken and on due cause shown.

(e) *Powers and duties.* The city board of adjustment shall have the following powers:

(1) To hear and decide appeals where it is alleged there is error in any order, requirement, decision or determination made by an administrative official in the enforcement or interpretation of this chapter or of any resolution/ordinance adopted pursuant thereto; and

(2) To authorize upon appeal in specific cases such variance from the terms of this chapter as will not be contrary to the public interest and where, owing to special conditions, a literal enforcement of the provisions of this chapter will result in unnecessary hardship, and so that the spirit of this chapter shall be observed and substantial justice done.

(f) *Decisions, appeals, rehearing.* In exercising the above mentioned powers, the city board of adjustment may, in conformity with the provisions of this chapter, reverse or affirm, wholly or partly, or modify the order, requirement, decision or determination as ought to be made, and to that end shall have all the powers of the office from whom the appeal is taken.

The concurring vote of four (4) members of the board shall be necessary to reverse any order, requirement, decision or determination of any administrative official, or to decide in favor of the applicant on any matter upon which it is required to pass under such resolution/ordinance, or to effect any variation in the application of this chapter.

Any person aggrieved by any decision of the city board of adjustment, or any affected taxpayer, or any officer, department, board, or bureau of the city may appeal the decision by presenting a petition to a court of record. The petition must set forth that the decision is illegal, in whole or in part, specifying the grounds of the illegality. Such petition shall be presented to the court within thirty (30) calendar days after the filing of the decision of the board.

If the city board of adjustment fails to act on a matter that is before it or scheduled to be before it for any reason other than on motion duly continuing the matter, the applicant may deem the matter be denied and may immediately proceed by appeal as provided in this subsection (f).

If an application for an administrative review or variance is denied by the city board of adjustment, another application shall not be filed within a period one (1) year from the date of denial, except upon the initiation of the city board of adjustment after a showing of a change of circumstances which would warrant a rehearing.

(Ord. No. 97-5048, § 13, 12-22-97)

## SEC. 27-1506. CITY VARIANCES.

(a) *Authority.* The city board of adjustment shall have the authority to grant a variance from the terms of this chapter in specific cases where it is found that the granting of the variance will not be contrary to the public interest and where, because of special conditions with respect

to the lot shape or topography, a literal enforcement of the provisions of the chapter would result in unnecessary hardship.

(b) *Applications.* An application for a variance shall be filed with the zoning coordinator under the following conditions:

(1) The application shall include, but not be limited to the following:

a. A legal and general description of the tract(s) upon which a variance is sought;

b. The names and addresses of the owner(s) of the land subject to the variance, and his/her agent, if any, along with the recorded property owner's signature;

c. A certified list of the names, addresses and legal descriptions of the owners of property within a radius of three hundred (300) or more feet of the exterior boundaries of the tract(s); and

d. Gummed mailing labels with the names and mailing addresses typed or printed neatly of all of the property owners indicated on the certified list.

(2) The applicant shall present a map showing the location of the property for which the application is submitted, and its relation to adjoining property;

(3) The applicant shall present a dimensioned site plan of the property for which the application is submitted which shall include, but not necessarily be limited to, the following:

a. The location and dimension of all vehicular points of ingress and egress, drives, off-street parking spaces, channelizations and traffic circulations;

b. The location and size of all existing and proposed buildings, structures and improvements; and

c. The existing buildings, structures and improvements shall be labeled as such and indicated by a solid line. The proposed buildings, structures and improvements shall be labeled as such and indicated by a dashed or dotted line.

(4) The application shall state reasons why the variance is being sought and shall specify the facts of hardship upon which the request for a variance is based;

(5) The application must be submitted at least twenty (20) days prior to the date of the public hearing;

(6) The application must be accompanied by payment of all applicable fees; and

(7) An application for a variance may not be withdrawn or amended by the applicant after the legal advertising as required by this chapter shall have first appeared. However, the city board of adjustment may, by majority vote of members present, allow the application to be withdrawn without prejudice with respect to the twelve (12) month limitation of this chapter.

(c) *Planning department action.* The zoning coordinator, upon receiving an application for a variance shall do the following:

(1) Consult with other departments of the city and/or county to fully evaluate the impact of the variance contemplated under the application upon public facilities and services;

(2) Study each application with reference to its appropriateness and effect on existing and proposed land uses; and its relationship to the comprehensive plan;

(3) Place notice of the time, date and place of the public hearing in a newspaper of general circulation fifteen (15) days in advance of the date set for the public hearing;

(4) Notify, by mail, the owner of the property and/or his/her agent, of the time, date and place of the public hearing five (5) days in advance of that date;

(5) Notify the property owners, by mail, within three hundred (300) feet of the exterior boundaries of the subject property of the time, date, place and proposed variance. The zoning coordinator may notify property owners within a radius of more than three hundred (300) feet if he/she determines that the proposed variance would likely have a substantial impact on the surrounding land uses;

(6) Place a notice of the time, date and place of the public hearing on the property fifteen (15) days prior to the hearing date; and

(7) Report his/her findings, in writing, to the city board of adjustment which report shall be a matter or public record.

(d) *City board of adjustment action.* The city board of adjustment, before it grants a variance shall determine:

(1) That special conditions and circumstances exist which are peculiar to the land, the lot or something inherent in the land which causes the hardship, and which are not applicable to other lands in the same district;

(2) That a literal interpretation of the provisions of this chapter would deprive the applicant of rights commonly enjoyed by other tracts in the same district;

(3) That granting the variance requested will not confer on the applicant any special privilege that is denied by this chapter to other land in the same district;

(4) That the granting of the variance will be in harmony with the general purpose and intent of this chapter and with the comprehensive plan;

(5) In granting any variance, the board may prescribe appropriate conditions and safeguards in conformity with this chapter. Violation of such conditions and safeguards, when made a part of the terms upon which the variance is granted, shall be deemed a violation of this chapter;

(6) The board shall prescribe a time limit within which the action for which the variance is required shall be begun or completed, or both. Failure to begin or complete such action within the time limit set shall void the variance; and

(7) Under no circumstances shall the board grant a variance to allow a use not permissible under the terms of this chapter in the district involved. A variance

shall not be a grant of special privilege inconsistent with limitations placed upon other property in the district.

(Ord. No. 97-5048, § 13, 12-22-97)

### SEC. 27-1507. COUNTY ZONING COMMISSION CREATED.

There is hereby created a Yellowstone County zoning commission to consist of five (5) members residing on property, any part of which lies within the Unincorporated Jurisdictional Area of this chapter but outside the limits of the City of Billings. The members are to be appointed by the board of county commissioners for a term of two (2) years and the terms of the members shall be staggered so that a minimum number of terms shall expire in any one (1) year. At the first regular meeting of the county zoning commission, the commission shall select a chairman and adopt written procedures for the conduct of its responsibilities as established in this section.

The members of said county zoning commission are required to attend all county zoning commission meetings advertised publicly, except in the case of an excused absence. The presence of three (3) members shall constitute a quorum.

The duties and powers of the county zoning commission shall be to recommend the boundaries of the various original districts and appropriate regulations to be enforced therein, and to hold public meetings and make recommendations to the board of county commissioners on all requests to amend, supplement, change, modify or repeal the regulations, restrictions and boundaries in the zoning districts. The board of county commissioners shall not take any action until it has received a final report from such commission.

(Ord. No. 97-5048, § 13, 12-22-97)

### SEC. 27-1508. AMENDMENTS TO CHAPTER.

(a) *General.* The regulations, restrictions and boundaries set forth in this chapter may, from time to time, be amended, supplemented, changed or repealed by the board of county commissioners provided, however, that no action on any application for amendment, change or repeal may be taken until the application has first been processed and advertised in accordance with the provisions of this chapter.

(b) *Application for map amendments.* Unless initiated by the board of planning or board of county commissioners, all applications for an amendment to the official map, or to the text of this chapter must be submitted in person by the property owner, the contract purchaser or the authorized agent of the property owner. Proposals to amend this chapter, except for the official zoning map, may also be initiated by the county zoning commission. An application for an amendment affecting the same property shall not be submitted more than once every twelve (12) months.

Each application to amend the official map or text shall be filed with the zoning coordinator, and each application shall be submitted under the following conditions:

(1) It shall include, but not be limited to, the following information:

a. A legal description of the tract(s) proposed to be rezoned;

b. A map showing the dimensions, acreage, and location of the tract(s) and adjacent land uses;

c. The present and proposed classification for the tract(s);

d. A certified list of the names, addresses and legal descriptions of the owners of property within a radius of three hundred (300) or more feet, as determined by the zoning coordinator, of the exterior boundaries of the tract(s);

e. Gummed mailing labels with the names and mailing addresses typed or printed neatly of all of the property owners indicated on the certified list;

f. The names and addresses of the owner(s) of the land and their agents, if any, along with the recorded property owner's signature; and

g. Payment of all applicable fees.

(2) Any application for an amendment to the official map must be submitted together with all applicable fees, to the zoning coordinator twenty (20) days prior to the date of the public hearing before the Yellowstone County zoning commission.

(3) An application may be withdrawn at any time prior to the publication of the legal advertisement for the public hearing before the county zoning commission without respect to the twelve (12) month waiting period. After legal notice for the county zoning commission public hearing has been published, the request for withdrawal shall be submitted to the planning department office at least twenty-four (24) hours prior to the public hearing. The county zoning commission may allow withdrawal of the application, after advertisement of the zoning commission public hearing has been published, by a majority vote of the members present, without prejudice with respect to the twelve (12) month waiting period after the application has first been submitted. However, no application shall be allowed to be withdrawn more than once within the twelve (12) month period after the application shall have first been submitted.

(4) An applicant requesting a zone change may request a thirty (30) day delay on the hearing of his/her application before the county zoning commission. The request for the delay and reasons must be submitted in writing to the planning office or chairman of the county zoning commission twenty-four (24) hours in advance of the public hearing. Approval of a delay shall require a majority vote of the members present, without requiring county commission approval of the delay. Only one such delay shall be allowed on any application.

(c) *Planning department action.* The zoning coordinator, upon receiving an application for rezoning an area or a particular piece of property, shall do the following:

(1) Consult with other departments of the city and/or county to fully evaluate the impact of any zoning change upon public facilities and services including, but not limited to schools, drainage, traffic and related facilities;

(2) Study each application with reference to its appropriateness and effect on existing and proposed land uses, and its correspondence with the comprehensive plan;

(3) Advertise notice of the application in a newspaper of general circulation at least fifteen (15) days in advance of the date of the county zoning commission public hearing. The notice shall contain: the classification sought, the location of the property, and the date, time and place of the county zoning commission public hearing;

(4) Notify, by mail, the applicant and/or his/her authorized agent at least five (5) days prior to the date of the county zoning commission public hearing of the date, time and place of such hearing;

(5) Notify, by mail, all property owners within three hundred (300) feet of the exterior boundaries of the property subject to the rezoning of the date, time and place of the county zoning commission public hearing and the existing and proposed classification at least fifteen (15) days in advance of that date. The zoning coordinator may notify property owners within a radius of more than three hundred (300) feet if he/she determines that the proposed rezoning of the property would likely have a substantial impact on the surrounding land uses;

(6) Place notice of the county zoning commission public hearing on the property subject to rezoning at least fifteen (15) days in advance of the date of the public hearing; and

(7) Report his/her findings and conclusions in writing to the county zoning commission, which report shall be a matter of public record.

(d) *County zoning commission action.* The county zoning commission shall review and take action upon each application in accordance with the provisions of this chapter, and after a public hearing for which the application has been legally advertised. Each application shall be presented to the county zoning commission by the zoning coordinator or his/her designee, together with his/her findings and conclusions on the matter. The county zoning commission may, by a majority vote of the members present, delay action for a period not to exceed thirty (30) days, without prejudice to the applicant. A report of the commission's decision and the zoning coordinator's findings and conclusions shall be submitted to the board of county commissioners.

The county zoning commission shall make a recommendation to the board of county commissioners to:

(1) Approve the application; or

(2) Deny the application.

The county zoning commission shall submit its recommendations in writing along with a statement indicating its reasons for granting, denying, or allowing withdrawal of the amendment within fifteen (15) days following the public hearing. In no case shall the county zoning commission make a recommendation that an amendment be granted for an amendment that was not legally advertised.

In making its recommendation to the board of county commissioners for an amendment to the official map or text of this chapter, the county zoning commission shall consider, among other things, the following:

(1) Whether the new zoning was designed in accordance with the comprehensive plan;

(2) Whether the new zoning was designed to lessen congestion in the streets;

(3) Whether the new zoning will promote health and general welfare;

(4) Whether the new zoning will secure safety from fire, panic and other dangers;

(5) Whether the new zoning will provide adequate light and air;

(6) Whether the new zoning will prevent the overcrowding of land;

(7) Whether the new zoning will avoid undue concentration of population;

(8) Whether the new zoning will facilitate the adequate provision of transportation, water, sewerage, schools, parks, fire, police and other public requirements;

(9) Whether the new zoning gives reasonable consideration to the character of the district;

(10) Whether the new zoning gives reasonable consideration to peculiar suitability of the property for particular uses;

(11) Whether the new zoning was adopted with a view to conserving the value of buildings; and

(12) Whether the new zoning will encourage the most appropriate use of land throughout Yellowstone County.

(e) *Board of county commissioners action.* Notice of the board of county commissioners public hearing shall be placed in a newspaper of general circulation. The notice shall contain the time, date and place of the board of county commissioners public hearing. Before taking any action on an application for an amendment to the official map, or amendment to the text of this chapter the board of county commissioners shall first consider the findings and recommendations of the county zoning commission. In no case shall the board approve an amendment for a classification other than the one advertised. The board shall:

(1) Approve the application;

(2) Deny the application;

(3) Allow withdrawal of the application; or

(4) Delay action on the application for a period not to exceed thirty (30) days.

(Ord. No. 97-5048, § 13, 12-22-97)

## SEC. 27-1509. SPECIAL REVIEW BY COUNTY ZONING COMMISSION.

(a) *General.* Although each zoning district is primarily intended for a predominant type of use, there are a number of uses which may or may not be appropriate in a particular district depending upon all the circumstances of the individual case. For example, the location, nature of

the proposed use, the character of the surrounding development, traffic capacities of adjacent streets and potential environmental effects, all may indicate that the circumstances of the development should be individually reviewed. It is the intent of this chapter to provide a system of review of such uses so that the community is assured that the uses are compatible with their locations and with surrounding land uses, and will further the purpose of this chapter and the objectives of the comprehensive plan.

(b) *Application procedure.* An application for a special review may be submitted by the property owner, contract purchaser or his/her authorized agent. Such application shall be filed with the zoning coordinator and shall be submitted under the following conditions:

(1) The application shall include, but not be limited to, the following information:

a. A legal and general description of the tract(s) upon which the special review use is sought;

b. A map showing the dimensions, acreage and location of the tract(s);

c. The names and addresses of the owner(s) of the tract(s) and his/her authorized agent, if any, along with the recorded property owner's signature;

d. A certified list of the names and addresses of the owners of property within a radius of three hundred (300) or more feet, as determined by the zoning coordinator, of the exterior boundaries of the tract(s);

e. Gummed mailing labels with the names and mailing addresses typed or printed neatly of all of the property owners indicated on the certified list;

f. A site plan showing major details of the proposed development including but not limited to: the location of proposed and existing buildings and structures; off-street parking and loading; service and refuse areas; means of ingress and egress; landscaping, screening, signs and open space areas;

g. The application must be accompanied by the payment of all applicable fees; and

h. Any other information the applicant believes will support his/her request or other information as requested by the zoning coordinator or planning department.

(2) An application may be withdrawn or amended at any time prior to the publication of the legal advertisement for the public hearing before the county zoning commission. After legal notice for the county zoning commission public hearing has been published, the request for withdrawal shall be submitted to the planning department office at least twenty-four (24) hours prior to the public hearing. The county zoning commission may allow withdrawal of the application, after advertisement of the zoning commission public hearing has been published, by a majority vote of the members present, without prejudice with respect to the twelve (12) month waiting period after the application has first been submitted. However, no application shall be allowed to be withdrawn more than once within the twelve (12) month period after the application shall have first been submitted.

(3) An applicant may request a delay for a period not to exceed thirty (30) days on the hearing of his/her application before the county zoning commission. The request for the delay and reasons must be submitted in writing to the planning office or chairperson of the county zoning commission twenty-four (24) hours in advance of the public hearing. Approval of a delay shall require a majority vote of the members present, without requiring county commission approval of the delay. Only one (1) such delay shall be allowed on any application.

(4) the application must be submitted, together with all applicable fees, to the zoning coordinator twenty (20) days prior to the date of the public hearing.

(c) *Planning department action.* The zoning coordinator, upon receiving an application for a special review use, shall do the following:

(1) Consult with other departments of the city and/or county to fully evaluate the impact of the use contemplated under the special review application upon public facilities and services;

(2) Study each application with reference to its appropriateness and effect on existing and proposed land uses, and its correspondence with the comprehensive plan;

(3) Advertise notice of the application in a newspaper of general circulation fifteen (15) days in advance of the date of the county zoning commission public hearing. The notice shall contain the time, date and place of the county zoning commission public hearing;

(4) Notify, by mail, the applicant and/or his/her authorized agent, of the time, date and place of the public hearing five (5) days in advance of that date;

(5) Notify the property owners, by mail, within three hundred (300) feet of the exterior boundaries of the tract(s) subject to the special review of the time, date, place and proposed use at least fifteen (15) days prior to the public hearing date. The zoning coordinator may notify property owners within a distance greater than three hundred (300) feet if he/she determines that the proposed use would be such as to have a substantial environmental impact on the surrounding land uses;

(6) Place notice of the public hearing on the property subject to the special review fifteen (15) days in advance of the public hearing; and

(7) Report his/her conclusions and findings, in writing, to the county zoning commission, which report shall become a matter of public record.

(d) *County zoning commission action.* The county zoning commission shall consider each application in accordance with the provisions of this chapter, and at a public hearing at which time the application has been legally advertised. Each application shall be presented to the county zoning commission, by the zoning coordinator or his/her designee, together with his/her conclusions and findings on the matter. The county zoning commission may, by a majority vote of the members present, delay action for a period not to exceed thirty (30) days, without prejudice to the applicant. A written report of the commission's decision and recommendation and the zoning coordinator's report shall be submitted to the board of county commissioners.

The county zoning commission shall make a recommendation to the board of county commissioners to:

(1) Approve the application;

(2) Conditionally approve the application; or

(3) Deny the application.

Recommendations from the county zoning commission shall be based on findings of fact and shall be transmitted to the applicant, or his/her agent and the board of county commissioners within fifteen (15) days of the date of the public hearing before the commission.

Before approving a special review use, the county zoning commission shall find that the contemplated use:

(1) Complies with all requirements of this chapter;

(2) Is consistent with the objectives and purposes of this chapter and the comprehensive plan; and

(3) Is compatible with surrounding land use or is otherwise screened and separated from adjacent land in such a way as to minimize adverse effects.

Further, the county zoning commission shall consider and may impose modifications or conditions concerning, but not limited to the following:

(1) Street and road capacity;

(2) Ingress and egress to adjoining streets;

(3) Off-street parking;

(4) Fencing, screening and landscaping;

(5) Building bulk and location;

(6) Usable open space;

(7) Signs and lighting; and/or

(8) Noise, vibration, air pollution and similar environmental influences.

(e) *Board of county commissioners action.* Notice of the board of county commissioners public hearing shall be placed in a newspaper of general circulation. The notice shall contain the time, date and place of the board of county commissioners public hearing. Before taking any action on an application for a special review use, the board of county commissioners shall first consider the findings and recommendations of the county zoning commission. In no case shall the board approve a special review use other than the one advertised. The board shall:

(1) Approve the application;

(2) Conditionally approve the application;

(3) Deny the application;

(4) Allow withdrawal of the application; or

(5) Delay the application for a period not to exceed thirty (30) days.

(Ord. No. 97-5048, § 13, 12-22-97)

## ARTICLE 27-1500. CITY AND COUNTY ZONING COMMISSIONS AND CITY AND COUNTY BOARDS OF ADJUSTMENT

### SEC. 27-1510. COUNTY BOARD OF ADJUSTMENT.

(a) *Created.* There is hereby created a Yellowstone County board of adjustment consisting of five (5) members residing on property, any part of which lies within the unincorporated jurisdictional area of this chapter, but outside the limits of the City of Billings. The members are to be appointed by the board of county commissioners for a term of two (2) years and the terms of the members shall be staggered so that a minimum number of terms shall expire in any one (1) year.

(b) *Proceedings.* Meetings of the county board of adjustment shall be scheduled at a regular time each month and special meetings may also be called by the chairperson. The chairperson may cancel the regular monthly meeting if no matters are pending for the board's consideration. The chairperson, or in his/her absence, the acting chairperson may administer oaths and compel the attendance of witnesses. All meetings shall be open to the public. In exercising its powers and duties under this chapter, not less than three (3) members of the board shall constitute a quorum.

The board of adjustment shall keep minutes of its proceedings, showing the vote of each member, or if absent or failure to vote, indicating such fact. The board shall keep records of its examinations and other official actions, all of which shall be public record and shall be filed in the office of the Yellowstone County board of planning, with copies forwarded to the board of county commissioners and zoning coordinator within thirty (30) days. The official minutes of the board's proceedings shall be signed by the chairperson or acting chairperson. The decision of the board shall become effective immediately, unless otherwise directed by the board. The board shall adopt bylaws for the conduct of its affairs and responsibilities under this chapter.

(c) *Hearing, appeals, notices.* Appeals to the county board of adjustment may be taken by any person aggrieved or by any office, department or bureau of the county affected by any decisions of the administrative officer. Such appeal shall be taken within a reasonable time, not to exceed thirty (30) days, by filing a notice of appeal specifying the grounds thereof with the officer from whom the appeal is taken and with the county board of adjustment. The officer from whom the appeal is taken shall forthwith transmit to the board all papers constituting the record upon which the action appealed was taken.

The county board of adjustment shall fix a reasonable time for the hearing of appeal, not to exceed thirty (30) days, give public notice thereof, as well as due notice to the parties in interest, and render a decision within a reasonable time not to exceed ten (10) days thereafter. At the hearing any party may appear in person, by agent or attorney.

(d) *Appeals, stay of proceedings.* An appeal stays all proceedings in furtherance of the action appealed from, unless the officer from whom the appeal is taken certifies to the county board of adjustment, after the notice of appeal shall have been filed with him/her, that by reason of facts stated in the certificate, a stay would in his/her opinion, cause imminent peril to life or property. In such cases, proceedings shall not be stayed other than by a restraining order which may be granted by the county board of adjustment or by a court of record upon application to same and notice to the officer from whom the appeal is taken and on due cause shown.

(e) *Powers and duties.* The county board of adjustment shall have the following powers:

(1) To hear and decide appeals where it is alleged there is error in any order, requirement, decision or determination made by an administrative official in the enforcement or interpretation of this chapter or of any resolution/ordinance adopted pursuant thereto;

(2) To authorize upon appeal in specific cases such variance from the terms of this chapter as will not be contrary to the public interest and where, owing to special conditions, a literal enforcement of the provisions of this chapter will result in unnecessary hardship, and so that the spirit of this chapter shall be observed and substantial justice done.

(f) *Decision and appeals.* In exercising the above mentioned powers, the county board of adjustment may, in conformity with the provisions of this chapter, reverse or affirm, wholly or partly, or modify the order, requirement, decision or determination as ought to be made, and to that end shall have all the powers of the office from whom the appeal is taken. The concurring vote of three (3) members of the board shall be necessary to reverse any order, requirement, decision or determination of any administrative official, or to decide in favor of the applicant on any matter upon which it is required to pass under such resolution/ordinance, or to effect any variation in the application of this chapter.

Any person aggrieved by any decision of the county board of adjustment, or any affected taxpayer, or any officer, department, board or bureau of the county may appeal the board's decision, subject to the following procedure:

(1) Present to a court of record a petition setting forth that such decision is illegal, in whole or in part, specifying the grounds of the illegality. Such petition shall be presented to the court within thirty (30) days after the decision of the board;

(2) That all action permitted by a grant of variance pursuant to the authority granted herein shall be stayed pending a petition to a court of record. The stay shall continue until the court has made a final determination;

(3) If the county board of adjustment fails to act on a matter that is before it or scheduled to be before it for any reason other than on motion duly continuing the matter, the applicant may deem the matter denied and may immediately proceed by appeal as provided in this BMCC section 27-1510(F).

If an application for an administrative review or variance is denied by the county board of adjustment, another application shall not be filed within a period of one (1) year from the date of denial.

(Ord. No. 97-5048, § 13, 12-22-97)

## SEC. 27-1511. COUNTY VARIANCES.

(a) *Authority.* The county board of adjustment shall have the authority to grant a variance from the terms of the chapter in specific cases where it is found that the granting of the variance will not be contrary to the public interest and where, because of special conditions with

respect to the lot shape or topography, a literal enforcement of the provisions of the chapter would result in unnecessary hardship.

(b) *Application procedure.* An application for a variance shall be filed with zoning coordinator under the following conditions:

(1) The application shall include, but not be limited to, the following:

a. A legal and general description of the tract(s) upon which the variance is sought;

b. The names and addresses of the owner(s) of the land subject to the variance, and his/her agent, if any, along with the recorded property owner's signature;

c. A certified list of the names, addresses and legal descriptions of the owners of property within a radius of three hundred (300) or more feet, as determined by the zoning coordinator, of the exterior boundaries of the tract(s); and

d. Gummed mailing labels with the names and mailing addresses typed or printed neatly of all of the property owners indicated on the certified list.

(2) The applicant shall present a map showing the location of the property for which the application is submitted, and its relationship to adjoining property;

(3) The applicant shall present a dimensioned site plan of the property for which the application is submitted which shall include, but not be limited to, the following:

a. The location and dimension of all vehicular points of ingress and egress, drives, off-street parking spaces, channelizations and traffic circulation;

b. The location and size of all existing and proposed buildings, structures and improvements; and

c. The existing buildings, structures and improvements shall be labeled as such and indicated by a solid line. The proposed buildings, structures and improvements shall be labeled as such and indicated by a dashed or dotted line.

(4) The application shall state reasons why the variance is being sought and shall specify the facts of hardship upon which the request for a variance is based;

(5) The application must be submitted at least twenty (20) days prior to the date of public hearing;

(6) The application must be accompanied by the payment of all applicable fees; and

(7) An application for a variance may not be withdrawn or amended by the applicant after the legal advertising as required by this Section shall have first appeared. However, the county board of adjustment may, by a two-thirds vote of all members, allow the application to be withdrawn without prejudice with respect to the twelve (12) month limitation of this chapter.

(c) *Planning department action.* The zoning coordinator, upon receiving an application for a variance, shall do the following:

(1) Consult with other departments of the city and/or county to fully evaluate the impact of the variance contemplated under the application upon public facilities and services;

(2) Study each application with reference to its appropriateness and effect on existing and proposed land uses, and its correspondence with the comprehensive plan;

(3) Place notice of the time, date and place for the public hearing in a newspaper of general circulation fifteen (15) days in advance of the date set for the public hearing;

(4) Notify, by mail, the owner(s) of the property and/or his/her agent, of the time, date and place of the public hearing five (5) days in advance of that date;

(5) Notify the property owners, by mail, within three hundred (300) feet of the exterior boundaries of the property subject to the variance of the time, date, and place of the public hearing and the proposed variance request at least fifteen (15) days prior to the public hearing. The zoning coordinator may notify property owners within a radius of more than three hundred (300) feet, if he/she determines that the proposed variance would likely have a substantial impact on the surrounding land uses;

(6) Place a notice of the time, date and place of the public hearing on the property fifteen (15) days prior to the hearing date; and

(7) Report his/her findings, in writing, to the county board of adjustment, which report shall be a matter of public record.

(d) *County board of adjustment action.* The county board of adjustment, before it grants a variance shall determine:

(1) That special conditions and circumstances exist which are peculiar to the land, the lot or something inherent in the land which causes the hardship, and which are not applicable to other lands in the same district;

(2) That a literal interpretation of the provisions of this chapter would deprive the applicant of rights commonly enjoyed by other tracts in the same district;

(3) That granting the variance requested will not confer on the applicant any special privilege that is denied by this chapter to other land in the same district;

(4) That the granting of the variance will be in harmony with the general purpose and intent of this chapter and with the comprehensive plan;

(5) In granting any variance, the board may prescribe appropriate conditions and safeguards in conformity with this Resolution/Ordinance. Violation of such conditions and safeguards, when made a part of the terms upon which the variance is granted, shall be deemed a violation of this Resolution/Ordinance;

(6) The board shall prescribe a time limit within which the action for which the variance is required shall be begun or completed, or both. Failure to begin or complete such action within the time limit set shall void the variance; and

(7) Under no circumstances shall the board grant a variance to allow a use not permissible under the terms of this Resolution/Ordinance in the district involved. A variance shall not be a grant of special privilege inconsistent with limitations placed upon other property in the same district.

(Ord. No. 97-5048, § 13, 12-22-97)

## ARTICLE 27-1600. ADMINISTRATION AND ENFORCEMENT

### SEC. 27-1601. INTENT.

It is the intent of this Resolution/Ordinance to provide for the efficient, reasonable, and impartial enforcement of this Resolution/Ordinance by authorizing an enforcement officer, the basic procedures for complying with the Resolution/Ordinance, and the penalties for violations.

### SEC. 27-1602. ADMINISTRATION.

(a) The Zoning Coordinator is hereby given the authority to administer the provisions of this Resolution/Ordinance for the City of Billings and the unincorporated Jurisdictional Area of Yellowstone County.

(b) The Zoning Coordinator shall supervise and effectuate the processing of applications for amendments to the Official Zoning Map, special review applications, requests for variances, and other applications under the terms of this Resolution/Ordinance. Further it shall be his/her responsibility to present any applications or requests to the appropriate board or commission.

(c) It shall further be the responsibility of the Zoning Coordinator to aid the various Boards, Commissions and Departments in transmitting appeal records to the Board of County Commissioners and the City Council and to otherwise promote procedural regularity in the administration of this Resolution/Ordinance. The position of Zoning Coordinator shall be within the organizational structure of the Yellowstone County Board of Planning.

(d) The Zoning Coordinator shall not have authority to act in any final reviewing capacity and any questions as to interpretation or enforcement shall be determined by the appropriate board, commission or department, unless such authority is specifically allowed in a chapter.

### SEC. 27-1603. ZONING ENFORCEMENT OFFICER.

It shall be the duty of the Zoning Coordinator or his/her designee to be the Enforcement Officer for the Zoning Regulations. He/she is hereby given the authority to enforce the provisions of this Resolution/Ordinance for the City of Billings and the unincorporated Jurisdictional Area of Yellowstone County.

### SEC. 27-1604. PENALTIES FOR VIOLATION.

(a) A violation of this act or any Resolution/Ordinance adopted pursuant thereto is hereby declared to be a misdemeanor and shall be punishable by a fine not exceeding five hundred ($500) dollars or imprisonment in the County Jail not exceeding six (6) months, or both, and in addition shall pay all costs and expenses involved. Each day such violation continues shall be considered to be a separate offense.

(b) In case any building or structure is erected, constructed, reconstructed, altered, repaired, converted, or maintained, or any building, structure, or land is used in violation of this act, or of any Resolution/Ordinance made under authority conferred hereby, the proper authorities of the City or County may institute any appropriate action or proceedings, in addition to other remedies, to prevent such unlawful erection, construction, reconstruction, alteration, repair, conversion, maintenance, or use to restrain, correct, or abate such violation to prevent the occupancy of such building, structure, or land to prevent any illegal act, conduct, business, or use in or about such premises.

## ARTICLE 27-1700 SEPARABILITY CAUSE, REPEAL OF CONFLICTING RESOLUTIONS/ORDINANCES AND EFFECTIVE DATE

### SEC. 27-1701. PROVISIONS OF THIS RESOLUTION/ORDINANCE DEVELOPED TO BE MINIMUM STANDARDS.

In their interpretation and application, the provisions of this Resolution/Ordinance shall be held to be the minimum requirements adopted for the promotion of the public health, safety and general welfare.

Whenever the requirements of this Resolution/Ordinance are at variance with the requirements of any other lawfully adopted rules, regulations, ordinances, deed restrictions or covenants, the most restrictive or that imposing the higher standards shall govern.

### SEC. 27-1702. SEPARABILITY CLAUSE.

If any provision of this Resolution/Ordinance or its application to any person or circumstances is held invalid, the remainder of the Resolution/Ordinance or the application of the provision to other persons or circumstances is not affected.

### SEC. 27-1703. REPEAL OF CONFLICTING RESOLUTIONS/ORDINANCES AND EFFECTIVE DATE.

Resolutions/Ordinances or parts of Resolutions/Ordinances in conflict with this Resolution/ Ordinance are hereby repealed to the extent necessary to give this Resolution/Ordinance full force and effect. This Zoning Resolution/Ordinance for the City of Billings and the unincorporated 4½-Mile Jurisdictional Area of Yellowstone County shall become effective on February 1, 1998.

### SEC. 27-1704. SCHEDULE OF FEES, CHARGES AND EXPENSES.

The city council and board of county commissioners shall establish a schedule of fees, charges and expenses and a collection procedure for appeals and other matters pertaining to this chapter. Said schedule may be amended from time to time by resolution/ordinance of the city council and board of county commissioners. Within this schedule of fees, the city administrator shall be responsible for setting the fee for the Medical Corridor Permit Zoning preliminary and final reviews, as established in BMCC section 27-909(B).

No zone change, special review or variance shall be issued unless or until such costs, charged, fees or expenses listed below have been paid in full nor shall any action be taken on proceedings before the city or county board of adjustment or zoning commission unless or until charges and fees have been paid in full to the planning and community services department.

SCHEDULE OF APPLICATION FEES

(1) Board of Adjustment--Variance:

| | | |
|---|---|---|
| a. | Residential . . ……. | $325.00 |
| b. | Commercial . . …… | 400.00 |

(2) Zoning Commission:

a. Zone change

Residential . . . 650.00

Commercial . . . 900.00

b. Special review

Residential . . . 650.00

Commercial . . . 900.00

(3) Planned development--Preliminary review and zone change
Change to fees in Resolution 98-17350

Five acres or less . . . 750.00

Over five acres . . . 1,200.00

(Ord. No. 03-5258, § 1, 10-14-03)

**YELLOWSTONE COUNTY SIGN CODE**
**[NOT PART OF THE UNIFIED ZONING CODE,**
**STAND ALONE FOR PROPERTY WITHIN THE 4 ½ MILE**
**COUNTY ZONING JURISDICTION ONLY]**

# ARTICLE X

# SIGNS

---


**Sec. 1 INTENT**
**Sec. 2 DEFINITIONS**
**Sec. 3 GENERAL PROVISIONS**
**Sec. 4 REGULATION BY ZONE**
**Sec. 5 COMMON SIGNAGE PLAN**
**Sec. 6 NONCONFORMING SIGNS**
**Sec. 7 CONSTRUCTION SPECIFICATIONS**
**Sec. 8 ADMINISTRATION AND ENFORCEMENT**


---

## Sec. 1 INTENT

A. The purpose of this Article shall be to coordinate the type, placement and scale of signs within the different land-use zones to recognize the commercial communication requirements of all sections of the business community; to encourage the innovative use of design; to promote both renovation and property maintenance; to allow for special circumstances; and to guarantee equal treatment under the law. These shall be accomplished by regulation of the display, erection, use and maintenance of signs. The use of signs is regulated according to zoning district. The placement and scale of signs are regulated by type and length of street frontage. No sign shall be permitted as a main or accessory use except in accordance with the provisions of this Article.

B. This Article shall not relate to building design. Nor shall this Article regulate official traffic or government signs; the copy and message of signs; signs not intended to be viewed from a public right-of-way; window displays; product dispensers and point of purchase displays; scoreboards on athletic fields; flags of any nation, government or fraternal organization; gravestones; barber poles; religious symbols; or any display or construction not defined herein as a sign.

Thus, the primary intent of this Article shall be to regulate signs of a commercial nature intended to be viewed from any vehicular or pedestrian public right-of-way.

## Sec. 2 DEFINITIONS

Words and phrases used in this Article have the meanings set forth in this section. Principles for computing sign area and sign height are contained in Section 3.

**Animated Sign:** Any sign that uses movement or change or lighting to depict action or create a special effect or scene.

**Area of Sign: Area of Sign:** The entire area of a sign including the area within a perimeter which forms the outside shape including the frame, forming an integral part of the display, but excluding

the necessary supports or uprights on which the sign may be placed. The frame of a sign may be excluded from the area where such frame conveys no message and is constructed or affixed for aesthetic reasons beyond the necessary supports.

For computing the areas of any wall or canopy sign which consists of letters mounted or painted on a wall or canopy, the area shall be deemed to be the area of the smallest rectangular figures which can encompass all of the letters. (See Section 3.04 for Calculation of sign area.)

**Banner Sign:** Any sign (other than an official flag) made of cloth, paper or fabric of any kind, which is used to attract attention, whether or not imprinted with words or characters.

**Beacon:** Any light with one or more beams directed into the atmosphere or directed at one or more points not on the same lot as the light source; also, any light with one or more beams that rotate or move.

**Billboard:** A sign which advertises products or services not sold or distributed on the premises on which the sign is located.

**Building Marker:** Any sign indicating the name of a building, date or other incidental information about its construction. A sign which is cut into a masonry surface or made of bronze or other permanent material.

**Canopy Sign:** Any sign that is a part of or attached to any awning, canopy or other fabric, plastic or structural protective cover over a door, entrance, window or outdoor service area, and which does not extend horizontally beyond the limits of the canopy.

**Changeable Copy Sign:** A sign whose informational content can be changed or altered by manual or electric, electro-mechanical or electronic means. Changeable signs include the following types:

1. **Manually Activated:** Signs whose alphabetic, pictographic or symbolic information content can be changed or altered by manual means.
2. **Electrically Activated:** Signs whose alphabetic, pictoragraphic or symbolic informational content can be changed or altered on a fixed display surface composed of electrically illuminated or mechanically driven changeable segments. Includes the following two types:
    a. **Fixed Message Electronic Signs:** Signs whose basic informational content has been pre-programmed to include only certain types of information projections, such as time, temperature, predictable traffic conditions or other events subject to prior programming.
    b. **Computer controlled Variable Message Electronic Signs:** Signs whose informational content can be changed or altered by means of computer-driven electronic impulses.

**Copy:** The graphic content of a sign surface in either permanent or removable letter, pictographic, symbolic or alphabetic form.

**Directional/Informational Sign:** An on-premise sign giving directions, instructions or facility information and which may contain the name or logo of an establishment but no advertising copy, e.g., parking or exit and entrance signs. The sign may contain a logo provided that the logo may not comprise more than 20% of the total sign area.

**Director:** The Planning Director of the County or his/her designee.

**Flag:** Any fabric, banner or bunting containing distinctive colors, patterns, or symbols, used as a symbol of a government, political subdivision, or other entity.

**Freestanding Sign:** Any sign supported by structures or supports that are placed on or anchored in, the ground and that are independent from any building or other structure, including monument signs.

**Government Sign:** Any temporary or permanent sign erected and maintained by the city, county, state or federal government for traffic direction or for designation of or direction to any school, hospital, historical site or public service, property or facility.

**Height of Sign:** The vertical distance measured from the highest point of the sign to the crown of the adjacent street. This does not include the interstate highway.

**Lot:** Any piece or parcel of land or a portion of a subdivision, the boundaries of which have been established by some legal instrument of record, that is recognized and intended as a unit for the purpose of transfer or ownership.

**Maintenance:** For the purposes of this Resolution, the cleaning, painting, repair or replacement of defective parts of a sign in a manner that does not alter the structure of the sign.

**Monument Sign:** A sign mounted directly to the ground with maximum height not to exceed six (6) feet.

**Nonconforming Sign:** A sign which was erected legally, but does not comply with subsequently enacted sign restrictions and regulations.

**Portable Sign:** Any sign not permanently attached to the ground or other permanent structure, or a sign designed to be transported, including, but not limited to, signs, designed to be transported by means of wheels; signs converted to A- or T-frames; menu and sandwich board signs; balloons used as signs; umbrellas used for advertising; and signs attached to or painted on vehicles parked and visible from the public right-of-way, unless said vehicle is used in the normal day-to-day operations of the business.

**Principal Building:** The building in which is conducted the principal use of the lot on which it is located. Lots with multiple principal uses may have multiple principal buildings, but storage buildings, garages and other clearly accessory uses shall not be considered principal buildings.

**Projecting Sign:** A sign, other than a flat wall sign, which is attached to and projects from a building, wall or other structure not specifically designed to support the sign. Supports shall be covered in a neat and orderly fashion. Guy wire support shall be prohibited.

**Roof Sign, Above-peak:** Any sign erected and constructed wholly on and over the roof of a building, supported by the roof structure, and extending vertically above the highest portion of the roof.

**Roof Sign, Integral:** Any sign erected or constructed as an integral or essentially integral part of a normal roof structure of any design, such that no part of the sign extends vertically above the highest portion of the roof and such that no part of the sign is separated from the rest of the roof by a space of more than six (6) inches.

**Setback:** The distance from the property line to the nearest part of the applicable building, structure or sign, measured perpendicularly to the property line.

**Sign:** Any device, fixture, placard or structure that uses any color, form, graphic, illumination, symbol or writing to advertise, announce the purpose of, or identify the purpose of a person or entity, or to communicate information of any kind to the public.

**Sign Administrator:** The Planning Director or his/her designee.

**Street:** A public way for vehicular traffic, whether designated as a street, highway, thoroughfare, parkway, throughway, road, avenue, boulevard, land, place or however otherwise designated which has been dedicated to or acquired for public use and which extends the full width between right-of-way lines.

**Street Frontage:** The length of the property line of any one (1) premises along each public right-of-way it borders excluding alleys and serviceways.

**Suspended Sign:** A sign that is suspended from the underside of a horizontal plane surface and is supported by such surface.

**Temporary Sign:** A non-permanent sign erected and maintained for a specific limited period of time.

**Wall Sign:** Any sign attached parallel to a wall, painted on the wall surface or erected and confined within the limits of an outside wall of any building or structure, which is supported by such wall or building, and which displays only one sign surface. Sign depth shall not exceed twenty-two (22) inches, measured from the face of the structure.

**Wind Driven Sign:** Any sign consisting of one (1) or a series of two (2) or more banners, flags, pennants, ribbons, spinners, streamers or other objects or material fastened in such a manner as to move upon being subjected to pressure by wind or breeze.

**Window Sign:** Any sign, pictures, symbol or combination thereof, designed to communicate information about an activity, business, commodity, event, sale or service, that is placed inside a window or upon the window panes or glass and is visible from the exterior of the window.

## Sec. 3 GENERAL PROVISIONS

It shall hereafter be unlawful for any person to erect, place or maintain a sign in the Jurisdictional Area of Yellowstone County except in accordance with the provisions of this Article.

### Sec. 3.02 Signs Prohibited

All signs not expressly permitted under this Article or exempt from regulation hereunder in accordance with the previous section are prohibited in the County. Such signs include, but are not limited to:

(a) Beacons;

(b) Wind driven sign, except flags as defined in Section 2 of this Article;

(c) Strings of lights not permanently mounted to a rigid background, except those exempt under Section 3.03.

(d) Inflatable signs and tethered balloons;

(e) All portable signs not specifically permitted under Section 4.05;

(f) Animated signs;

(g) All above-peak roof signs;

(h) All banner signs except as permitted under Section 4.06;

(i) Abandoned signs;

(j) Signs attached to trees, telephone poles, public benches, streetlights or placed on any public property or public right-of-way; and

(k) Signs placed on vehicles or trailers which are parked or located for the primary purpose of displaying said signs (this does not apply to allowed portable signs or to signs or lettering on buses, taxis or vehicles operating during the normal course of business).

**Sec. 3.02 Permits Required**

Unless otherwise provided by this Article, all signs shall require permits and payment of fees as described in Section 7 of this Article. No permit is required of the maintenance of a sign or for a change of copy on painted, printed or changeable copy sign. Prior to any structural maintenance, the sign owner or the sign contractor is required to apply for and obtain a permit and to notify the Sign Administrator for an inspection when the maintenance is complete.

**Sec. 3.03 Signs Not Requiring Permits**

The following types of signs are exempted from permit requirements but must be in conformance with all other requirements of this Article:

(a) Construction signs of sixteen (16) square feet or less;

(b) Special event or holiday lights or decorations;

(c) Nameplates of two (2) square feet or less;

(d) Public signs or notices, or any sign relating to an emergency;

(e) Real estate signs;

(f) Political signs;

(g) Interior signs not visible from the exterior of the building;

(h) Directional signs not to exceed twelve (12) square feet in area or six (6) feet in height; and

(i) Temporary signs for seasonal agricultural sales in the Agricultural Open Space (A-1) district only. Such signs shall not exceed sixteen (16) square feet and may only be erected for sixty (60) days. One (1) sign per use per calendar year shall be allowed.

**Sec. 3.04 Calculation of Sign Area**

The entire area within a single continuous perimeter enclosing the extreme limits of such sign and in no case passing through or between and adjacent elements of the same. Such perimeter shall not include any structural elements lying outside the limits of such sign which do not form any integral part of the display.

The gross area of a sign with more than one face shall be computed by adding together the area of all sign faces visible from any one point. When two (2) identical sign faces are placed back to back, so that both faces cannot be viewed from any point at the same time, and when such sign faces are part of the same sign structure, the sign area shall be computed by the measurement of one on the faces.

For computing the area of any wall or canopy sign which consists of letters mounted or painted on a wall or canopy, the area shall be deemed to be the area of the smallest rectangular figures which can encompass all of the letters.

**Sec. 3.05 Clear Vision Triangle**

No sign shall be placed within any clear vision triangle as illustrated in Article IV, Section 8, figure 2 of these regulations.

**Sec. 3.06 Maintenance**

All signs shall be properly maintained. Exposed surfaces shall be clean and painted if paint is required. Defective parts shall be replaced. The Administrator shall have the right under Section 8.09 to order the repair or removal of any sign which is defective, damaged or substantially deteriorated, as defined in the Building Code.

[section 27-615 and section 27-618 of the Unified Zoning Code]

**Sec. 3.07 Lighting**

Unless otherwise prohibited by this Article, all signs may be illuminated.

**Sec. 3.08 Changeable Copy**

Unless otherwise specified by this Article, any sign herein allowed may use manual or fixed message electronic sign.

Computer controlled variable message electronic signs shall be permitted provided that the bottom of the message center is ten (10) feet above the crown of the adjacent road. Computer controlled variable message electronic signs shall be permitted only in Community Commercial (CC),

Highway Commercial (HC), Controlled Industrial (CI) and Heavy Industrial (HI).

### Sec. 3.09 Sign Contractor's License

No person may engage in the business or erecting, altering, relocating, constructing or maintaining signs without a valid contractor's licenses and all required state and federal licenses.

### Sec. 3.10 Indemnification and Insurance

All persons involved in the maintenance, installation, alteration or relocation of signs shall agree to hold harmless and indemnify the County, its officers, agents and employees against any and all claims of negligence resulting from such work insofar as this Article has not specifically directed the placement of a sign.

All persons involved in the maintenance, installation, alteration or relocation of signs shall maintain all required insurance and shall file with the state and the county a current satisfactory certificate of insurance to indemnify the state and the county against any form of liability.

## Sec. 4 REGULATION BY ZONE

In any zoning district no sign may be placed or designed so as to simulate or interfere with traffic control devices or official highway directional/informational signs.

### Sec. 4.01 Signs Permitted in Residential Zones

These requirements apply to the following zoning districts: Agricultural Open Space (A-1), Agricultural Suburban (A-S), Residential 15,000 (R-15,000), Residential 9600 (R-9600), Residential 7000 (R-7000) and Residential 6000 (R-6000).

(a) One non-illuminated sign for each street frontage of a construction project, not to exceed forty-eight (48) square feet in sign area. Such signs may be erected thirty (30) days prior to beginning of construction and shall be removed thirty (30) days following completion of construction.

(b) One non-illuminated real estate sign per lot or premises not to exceed sixteen (16) square feet in sign area. Such signs must be removed fifteen (15) days following sale, rental or lease of the real estate involved.

(c) One non-illuminated attached building nameplate per occupancy, not to exceed two (2) square feet in sign area.

(d) One non-illuminated political sign not to exceed sixteen (16) square feet in sign area. Such signs shall not be erected more than forty-five (45) days prior to the election or referendum concerned and shall be removed ten (10) days following such election or referendum. Political signs may be placed only on private property and only with the permission of the property owner.

(e) One subdivision sign per street frontage not to exceed forty-eight (48) square feet in sign area in each location.

(f) One identification sign per entrance to apartment or condominium complex, not to exceed forty-eight (48) square feet in sign area.

(g) One ranch identification sign at each public entrance, not to exceed forty-eight (48) square feet in sign area or thirty-two (32) feet in height. This sign is permitted in the Agricultural Open Space (A-1) district only.

(h) One temporary sign not to exceed thirty-two square feet in area or eight (8) feet in height for the sale of agricultural products produced on site. This shall be permitted in the Agricultural - Open Space (A-O) district only. Each sign may be erected for no more than sixty (60) days. A temporary sign permit shall be required.

(i) For permitted non-commercial and non-residential uses such as schools, churches and synagogues, one freestanding sign, not to exceed forty-eight (48) square feet in sign area, and one wall sign not to exceed forty-eight (48) square feet in sign area.

Special regulations for residential zones are as follows:

(j) All allowed freestanding signs, except permitted ranch signs, shall have a maximum height limit of six (6) feet and shall have a setback of fifteen (15) feet from the property line.

**Sec. 4.02 Signs Permitted in Residential Professional (RP) and Neighborhood Commercial (NC) Zone**s.

Signs are allowed as follows in the Residential Professional (RP) and the Neighborhood Commercial (NC) zones:

(a) All signs as permitted in Section 4.01.

(b) The total square feet of all signs located on the property, including, but not limited to freestanding, wall, canopy, under canopy, and directional signs, shall not exceed two (2) square feet in sign area for each lineal foot of property frontage.

(c) One freestanding sign or monument sign per street frontage not to exceed one (1) square foot in sign area for each lineal foot of property frontage on which the sign is place. Such signs many not exceed a height of twenty (20) feet. Maximum sign size is seventy-five (75) square feet.

(d) One (1) wall sign, canopy or electric awning sign not to exceed fifteen (15) percent of the area of the building elevation on which the signs are installed.

(e) One (1) under-canopy or wall sign for each separate occupancy or separate entrance not to exceed eight (8) square feet in sign area. Under-canopy signs must have a minimum clearance of nine (9) feet from the sidewalk.

(f) Window signs shall not exceed fifteen (15) percent of the window area. This includes permanent and temporary window signs.

(g) Directional/informational signs as required.

Special regulations and allowances for Residential Professional (RP) and Neighborhood Commercial (NC) zones area as follows:

(h) Where any occupancy is on a corner lot, a minimum clear vision zone is to be maintained in a triangulated area at the point of intersection to allow an unobstructed view of oncoming traffic.

(i) Freestanding signs shall maintain a minimum clearance of ten (10) feet over any sidewalk and fourteen (14) feet over any parking lot, driveway or crown of the street, whichever is higher.

(j) Minimum setback for the leading edge of the sign shall be five (5) inside the property line with a maximum height of ten (10) feet. For each additional foot the sign is setback the sign height may increase one (1) foot to a maximum of twenty (20) feet in height.

**Sec. 4.03 Signs Permitted in Community Commercial (CC), Highway Commercial (HC), Controlled Industrial (CI) and Heavy Industrial (HI)**

Signs are allowed as follows in Community Commercial (CC), Highway Commercial (HC), Controlled Industrial (CI) and Heavy Industrial (HI) zones:

(a) All signs as permitted in Section 4.01 and 4.02.

(b) The total square feet of all signs located on the property, including, but not limited to freestanding, wall, projecting, integrated roof, canopy, under-canopy, and directional signs, shall not exceed three (3) square feet in sign area for each lineal foot of property frontage.

(c) One freestanding sign per street frontage not to exceed two (2) square feet of sign are for each lineal foot of property frontage on which the sign is place, with a maximum sign size of one hundred-fifty (150) square feet. The maximum sign height shall be twenty-four (24) feet. Where street frontage exceeds five hundred (500) feet, one additional freestanding sign may be allowed per five hundred (500) foot increment.

(d) Minimum setback for the leading edge of the sign shall be five (5) inside the property line with a maximum height of ten (10) feet. For each additional foot the sign is setback the sign height may increase one and one-half (1-1/2) feet to a maximum of twenty-four (24) feet in height.

(e) Wall signs shall not exceed twenty percent (20%) of the square footage of the wall area upon which they are installed. Canopy signs and electric awning signs shall not exceed twenty percent (20%) of the square footage of the wall area upon which they are installed (see Section 3.04 for sign area calculations). The combination of wall signs, canopy signs and electric awning signs shall not exceed the allowable square footage for the wall upon which they are placed.

(f) Integrated roof signs may be used instead of wall signs. The integrated roof sign size shall not exceed the allowable size for a wall sign. Integrated roof signs shall be constructed so as to conceal all structures and fastenings. The height of the sign shall not exceed the roof to which it is attached.

(g) Window signs shall not exceed thirty (30) percent of the window area. This included permanent and temporary window signs.

(h) Projecting signs may be used instead of any wall or freestanding signs provided they do not project beyond the property line and maintain a clearance of ten (10) feet over sidewalk and fourteen (14) feet over any parking lot, driveway or crown of the street, whichever is higher. Projecting sign size shall not exceed the allowable size of wall signs. The height of the sign shall not exceed the roof of the wall to which it is attached.

(i) One (1) under-canopy sign or wall sign for each separate occupancy or separate entrance not to exceed eight (8) square feet in sign area. Under-canopy signs must have a minimum clearance of ten (10) feet over the sidewalk.

(j) On-premises directional signs as required

**Sec. 4.04 Signs Permitted in the Interstate Corridor**

Signs are allowed as follows in the Interstate Corridor.

(a) All signs as permitted in Sections 4.01, 4.02 and 4.03.

(b) The total square feet of all signs located on the property, including, but not limited to freestanding, wall, projecting, integrated roof, canopy, under-canopy, and directional signs, shall not exceed three (3) square feet in sign area for each lineal foot of property frontage. This frontage shall be calculated using local streets, not the interstate highway.

(c) Freestanding signs within the Interstate Corridor may be installed to a height of forty (40) feet and may be a maximum of three hundred-fifty (350) square feet if the principal purpose of such signs is to address interstate traffic.

(d) Minimum setback for the leading edge of the sign shall be five (5) feet inside the property line with a maximum height of ten (10) feet. For each additional foot the sign is setback the sign height may increase one and one-half (1-1/2) feet to a maximum of forty (40) feet, if it is a freestanding sign addressing interstate traffic or twenty-four (24) feet for all other freestanding signs.

(e) Freestanding signs which do not address interstate traffic must comply with the requirements for the zoning districts as outlined in Sections 4.01, 4.02 and 4.03.

**Sec. 4.05 Shopping Center Signs**

Shopping Center signs shall be allowed in the following zoning districts: Community Commercial (CC), Highway Commercial (HC), Controlled Industrial (CI) and Heavy Industrial (HI). Shopping Center signs may not be used in conjunction with a Common Signage Plan.

(a) Shopping Centers shall be allowed one (1) freestanding directory sign per frontage. The sign may be one hundred-fifty (150) square feet plus five percent (5%) of the one hundred-fifty (150) square feet per tenant. Maximum sign size shall not exceed three hundred-fifty (350) square feet or the allowable square footage for the frontage on which the sign is installed.

The setback requirements in Section 4.03 (d) shall apply.

**Sec. 4.06 Billboards**

(a) Billboards shall be permitted in the Interstate Corridor (660 feet either side of the right-of-way of the Interstate Highway) on properties zoned CC, HC, CI or HI as follows:

1. Billboards located within the Interstate Corridor shall have a maximum size of six hundred (600) square feet in size and shall be no more than forty (40) feet in height.
2. Minimum distance between billboards shall five hundred (500) feet.
3. Lighting shall be designed to minimize glare and interference with any adjacent residential uses or traffic.

Billboards not located in the interstate corridor are allowed as indicated below.

(b) Billboards shall be permitted in Highway Commercial (HC) as follows:

1. Billboards shall be a maximum of three hundred (300) square feet in size and a maximum of thirty (30) feet in height.
2. Minimum distance between billboards shall be seven hundred (700) feet.
3. Lighting shall be designed to minimize glare and interference with any adjacent residential uses or traffic.

(c) Billboards shall be permitted in Community Commercial (CC) as follows:

1. Billboards shall be a maximum of two hundred eighty-eight (288) square feet in size and a maximum of thirty (30) feet in height.
2. Minimum distance between billboards shall be seven hundred fifty (750) feet.
3. Lighting shall be designed to minimize glare and interference with any adjacent residential uses or traffic.

(d) Billboards shall be permitted in Controlled Industrial (CI) and Heavy Industrial (HI) as follows:

1. Billboards shall be a maximum of three hundred seventy-eighty (378) square feet in size and a maximum of forty (40) feet in height.
2. Minimum distance between billboards shall be five hundred fifty (500) feet.
3. Lighting shall be designed to minimize glare and interference with any adjacent residential uses or traffic.

**Sec. 4.05 Temporary Signs**

Temporary Sign Permits: Temporary signs shall be allowed on private property only upon issuance of a Temporary Sign Permit, which shall be subject to the following requirements:

(a) Term: A temporary sign permit shall allow the use of a temporary sign for new businesses or to existing businesses which are relocating and shall be limited in use to one (1) time for no more than sixty (60) days.

(b) Number: Only one (1) temporary sign permit shall be issued to the same business license holder on the same lot in any calendar year.

(c) Other Conditions: A Temporary sign shall be allowed only NC, CC, HC, CI, and HI zoning districts.

**Sec. 4.06 Banner Signs**

Permits for Banner Signs in the Public Right-of-Way: Permits for banner signs in the public right-of-way shall be issued in accordance with the following conditions:

(a) Application: A banner sign application, which has been signed and approved by the owners of all private property to which the sign will be affixed, shall be submitted.

1. The banner sign application must be submitted to and approved by the Director prior to placement of the banner sign.

2. Application for a banner sign may not be submitted earlier than six (6) months prior to the date when the sign will first be displayed.

(b) Term and Number of Permits: The maximum time during which any banner sign may be displayed is thirty (30) days. One permit shall cover a maximum of five (5) banners and locations.

(c) Message and Symbols on Banner Signs: Message and symbols are limited to public service messages with no commercial advertising of any nature appearing on the banner. This shall not preclude the identification of an event sponsor provided that such identification shall not occupy more than fifteen percent (15%) of the area of the banner.

(d) Size of Banner Signs: The maximum allowable size of a banner sign is three (3) feet by twenty (20) feet.

(e) Banner signs are permitted in the NC, CC, HC, CI and HI zoning districts.

(f) Other Conditions: The County may require the applicant to indemnify the County and to provide insurance covering any liability that may occur as a result of placement of the banner sign.

**Sec. 5 COMMON SIGNAGE PLAN**

(a) Common Signage Plan: If the owners of two or more contiguous or adjacent (disregarding intervening streets and alleys) lots or the owner of a single lot with more than one building (excluding accessory buildings) or multiple use buildings, file with the Director for such lots

a Common Signage Plan conforming with the provisions of this section, a twenty-five (25) percent increase in the maximum total sign area shall be allowed for each included lot. This bonus shall be allocated within each lot as the owner(s) elects.

(b) Provisions of Common Signage Plan: The Common Signage Plan shall contain all of the following information:

1. An accurate plot plan of the lot, at such scale as the Director may reasonably require;
2. Location of buildings, parking lots, driveways, clear vision triangles and landscaped areas on such lot;
3. Computation of the maximum total sign area, the maximum area for individual signs, the height of signs and the number of freestanding signs allowed on the lot(s) included in the plan under this Article; and
4. An accurate indication on the plot plan of the proposed location of each present and future sign of any type, whether requiring a permit or not.
5. Window signs may simply indicate the areas of the windows to be covered by window signs and the general type of the window signs (e.g., paper affixed to window, painted, etched on glass or some other material hung inside the window) and need not specify the exact dimension or nature of every window sign.

and shall also specify standards of consistency among all signs on the lots affected by the Plan with regard to:

1. Color scheme;
2. Letter or graphic style;
3. Lighting;
4. Location of each sign on the buildings;
5. Material; and
6. Sign proportions.

The above criteria does not apply to registered trademarks or established logos.

(c) Limit on Number of Freestanding Signs Under Common Signage Plan: The Common Signage Plan, for all lots with multiple uses or multiple users, shall limit the number of freestanding signs to a total of one for each street on which the lots included in the plan have frontage and shall provide for shared or common usage of such signs.

(d) Other Provisions of the Common Signage Plan: The Common signage Plan may contain other restrictions as the owners of the lots may reasonably determine.

(e) Consent: Common signage Plan shall be signed by all owners or their authorized agents in such form as the Director shall require.

(f) Procedures: Common Signage Plan shall be included in any development plan, site plan, planned unit development or other official plan required by the County for the proposed development and shall be processed simultaneously with such other plan.

(g) Amendment: Common Signage Plan may be amended by filing a new or Common Signage Plan that conforms with all requirements of the Resolution then in effect.

(h) Existing Signs Not conforming to Common Signage Plan: If any new or amended Common Signage Plan is filed for a property on which existing signs are located, it shall include a schedule for bringing into conformance, within five (5) years all signs not conforming to the proposed amended plan or to the requirements of this Resolution effect on the date of submission.

(i) Binding Effect: After approval of a Common Signage Plan, no sign shall be erected, placed, painted or maintained, except in conformance with such plan, and such may be enforced in the same way as any provision of this Resolution. The Common Signage Plan may be dissolved at the request of the parties involved. Once the Common Signage Plan is dissolved all signage for the development must be brought into compliance with the provisions this Article within thirty (30) days of dissolution of the Common Signage Plan. In case of any conflict between the provisions of this Resolution and Common Signage Plan, the Resolution shall control.

## Sec. 6 NONCONFORMING SIGNS

### Sec. 6.01 Determination of Legal Nonconformity

Existing signs which do not conform to the specific provisions of this Article may be eligible for the designation "legal nonconforming" provided that:

(a) The Administrator determines such signs are properly maintained and do not in any way endanger the public.

(b) The sign was installed in conformance with a valid permit or variance, or complied with all applicable laws on the date of adoption of this Resolution.

(c) The sign owner registers the sign with the Administrator within six (6) months of the adoption of this Resolution. If the owner fails to register the nonconforming sign with the Administrator, the sign then must be brought into compliance with this Article.

### Sec. 6.02 Loss of Legal Nonconforming Status

A legal nonconforming sign may lose this designation if;

(a) The sign is relocated or replaced.

(b) The structure or size of this sign is altered in any way except toward compliance with this Article. This does not refer to change of copy or normal maintenance.

### Sec. 6.03 Maintenance and Repair of Nonconforming Signs

The legal nonconforming sign is subject to all requirements of this Article regarding, safety, maintenance and repair. However, if the sign suffers more than fifty (50) percent damage or deterioration, as based on appraisal, it must be brought into conformance with this Article or removed. The Yellowstone County Appraisers Office appraisal shall be used. If the sign owner does not agree with the County's appraisal of the sign, he/she may then obtain a third party appraisal from a certified appraiser at his/her own expense.

## Sec. 7 CONSTRUCTION SPECIFICATIONS

### Sec. 7.01 Construction Specifications

(a) All signs shall be installed in compliance with the Uniform Building Code (UBC) and the National Electric Code (NEC).

(b) All electrical freestanding signs, except billboards, must have underground electrical service to such signs.

## Sec. 8 ADMINISTRATION AND ENFORCEMENT

### Sec. 8.01 Sign Administrator

The Administrator shall be the Planning Director or his/her appointee and is authorized to process applications for permits and variances, hold public hearing as required, and enforce and carry out all provisions of this Article. The Administrator is authorized to promulgate regulations and procedures consistent with this function.

The Administrator is empowered, upon presentation of proper credentials, to enter or inspect any building, structure or premises in the County for the purpose of inspection of a sign and its structural and electrical connections to ensure compliance with all applicable laws and regulations. Such inspections shall be carried out during business hours unless an emergency exists.

### Sec. 8.02 Applications for Permits

Applications for a permit for the erection, relocation or structural repair of a sign shall be made to the Administrator upon a form provided by the Administrator and shall include, but not be limited to, the following information:

(a) Name and address of the owner of the sign.

(b) Street address or location of the property on which the sign is to be located, along with the name and address of the property owner.

(c) The name, address and license number of the sign contractor installing the sign.

(d) The type of sign or sign structure as defined in this Article.

(e) A site plan with measurements showing the proposed location of the signs along with the locations of all existing signs on the same premises.

(f) Specifications and drawings showing the materials, design, dimensions, structural supports and electrical components of the proposed sign.

**Sec. 8.03 Permit Fees**

All applications for permits filed with the Administrator shall be accompanied by a payment of the initial permit fee for each sign as established by Resolution by the Yellowstone County Board of County Commissioners. Said permit fee may be revised from time to time by resolution and approval of the Yellowstone County Board of County Commissioners.

**Sec. 8.04 Issuance and Denial**

The Administrator shall issue a permit and permit sticker or tag for the erection, structural alteration or relocation of a sign within ten (10) working days of receipt of a valid application, provided that the sign complies with all applicable laws and regulations of the County. In all applications where a matter of interpretation arises, the more specific definition or higher standard shall prevail.

When a permit is denied, the Administrator shall within ten (10) working days, provide a written notice to the applicant along with a statement of the reasons for denial, citing sections of this Article and interpretation of possible nonconformity. The Administrator may suspend or revoke an issued permit for any false statement or misrepresentation of facts in the application.

**Sec. 8.05 Permit Condition, Refunds, and Penalties**

If a permit is denied, the permit fee will be refunded to the applicant.

A permit is valid for ninety (90) days upon issuance of the permit. A one (1) time extension for sixty (60) days may be granted by the Administrator, provided that the written request for the extension is made prior to the expiration date of the issued permit.

If any sign is installed or placed on any property prior to receipt of a permit, the specified permit fee shall be doubled. However, payment of the doubled fee shall not relieve any person or any other requirements or penalties prescribed in this Article.

**Sec. 8.06 Inspection Upon Completion**

Any person installing, structurally altering or relocating a sign for which a permit has been issued shall notify the Administrator upon completion of the work. The Administrator may require a final inspection, including an electrical inspection and inspection of footings on freestanding signs.

The Administrator may require at the time of issuance of a permit written notification for an inspection be submitted prior to the installation of certain signs.

**Sec. 8.07 Variances**

All variances shall follow the procedure as outlined in Article V, Section 7 of the Yellowstone County Zoning Regulations.

[Section 27-1511 Unified Zoning Regulations]

**Sec. 8.08 Violations**

When, in the opinion of the Administrator, a violation of this Article exists, the Administrator shall issue a written notice to the alleged violator. The notice shall specify those sections which the individual may be in violation of, and shall state that the individual has fourteen (14) days from the date of the order in which to correct the alleged violation.

If, upon, inspection, the Administrator finds a sign is abandoned or structurally, materially or electrically defective, or in any way endangers the public, the Administrator shall issue a written notice to the owner of the sign and the occupant of the premises stating the nature of the violation and requiring them to repair or remove the sign within fourteen (14) days of the date of the notice.

In cases of emergency, the Administrator may cause the immediate removal of a dangerous or defective sign without notice. Signs removed in this manner must present a hazard to the public safety as defined in the local building or traffic codes.

**Sec. 8.09 Removal of Signs By The Administrator**

The Administrator may cause the removal of an illegal sign in cases of emergency, or for failure to comply with the written orders of removal or repair. After removal or demolition of the sign, a notice shall be mailed to the sign owner stating the nature of the work and the date on which it was performed and demanding payment of the costs as certified by the Administrator.

If the amount specified in the notice is not paid within thirty (30) days of the notice, it shall become an assessment upon a lien against the property of the sign owner, and will be certified as an assessment against the property together with 1.5 percent per month penalty for collection in the same manner as the real estate taxes.

The owner of the property upon which the sign is located shall be presumed to be the owner of all signs thereon unless facts to the contrary are brought to the attention of the Administrator, as in the case of a leased sign.

For purposes of removal, the definition of sign shall include all sign embellishments and structures designed specifically to support the sign.

**Sec. 8.10 Penalties**

Any person who fails to comply with the provisions of this Resolution may be subject to penalties as outlined in Article XI, Section 3 of the Yellowstone County Zoning Regulations.

[Section 27-1604 Unified Zoning Regulations]

# Planning & Community Services Department

**"Serving Billings, Broadview and Yellowstone County"**

**510 North Broadway, 4th Floor**
**Billings, Montana 59101**
**Fax: (406) 657-8327**
**Phone: (406) 657-8246**


# SPECIAL ZONING DISTRICTS
# FREQUENTLY ASKED QUESTIONS

***What are Special Zoning Districts?***
The Board of County Commissioners can designate any area outside its primary Planning Jurisdiction as a Special Zoning District. Special Districts allocate primary and incidental land uses in a defined area to further the health, safety and general welfare of the people of the county.

***Who creates a Special Zoning District?***
The Board of County Commissioners may, if they find it in the public interest, or if 60 percent or more of the freeholders affected by such a district petition to establish a Special Zoning District. If 50 percent of the titled property owners protest the establishment of the district within 30 days of its establishment, the Board may not create the district.

***Why do we need Special Zoning Districts?***
Outside incorporated cities, there are many smaller settlements in Yellowstone County that are experiencing residential and commercial growth. Most of these areas do not have any land use plans or development standards other than basic health and sanitary regulations. Many of the 6 (six) existing Special Zoning Districts in Yellowstone County were establish by petition of the area residents in reaction to a proposed land development they found objectionable.

***What types of regulations can be included in Special Zoning Districts?***
All types of land use regulations can be adopted in Special Zoning Districts. Each regulation must meet the constitutional protections provided by the Montana and U.S. Constitutions. Each regulation must be related to the protection of a legitimate governmental interest such as preservation of property value, groundwater or surface waters, productive agricultural lands, separation of incompatible land uses and similar public interests.

***What is the first step in the process?***
Either the residents submit a petition to establish a special zoning district <u>or</u> the Board of Commissioners establishes the district. Special Zoning Districts must be at least 40 acres in size. Immediately the Board of Commissioners appoints a Planning and Zoning Commission to oversee the development of the land use plan and regulations. The Planning and Zoning Commission consists of the three county commissioners, the county surveyor and one other county official appointed by the Board of Commissioners.

***How long does the process take?***
Special Zoning Districts take as little as 90 days to process or as much as 24 months to process. The length of time depends on the complexity of the land use issues, the amount of initial agreement on expectations for the district and available resources from county agencies to work on the district. State law mandates specific public notification periods and public hearings.

## Existing Special Zoning Districts

***Yellowstone County contains seven special zoning districts adopted under 76-2-101, MCA, which authorizes citizen-initiated zoning districts. The special zoning districts are administered by the Planning and Zoning Commission and regulations are enforced by the Planning Department. The Planning and Zoning Commission for these districts is composed of the County Commissioners and Clerk and Recorder. The special zoning districts are shown on Map 4.1.2.***

***Echo Canyon Area, Special Zoning District 12***

Adopted in 1970, Yellowstone County Planning and Zoning District No. 12 encompasses approximately 3.75 square miles and is located in Sections 15, 22, 23, and 24, Township 1 North, Range 24 East. The district regulations permit single family dwellings with accessory buildings, agricultural uses, home occupations and public parks. Restrictions are placed on building height, setbacks, as well as lot size, lot coverage, signage and parking areas.

***Special Zoning District 14***

Special Zoning District 14 contains approximately 31 square miles and stretches from the Yellowstone River south to the south township line of Township 2 South, Range 25 East. It is bordered on the west by the Laurel zoning jurisdiction and Special Zoning District 16 to the south. The district was adopted in 1977 and included agricultural, residential, and public zoning. The district was rezoned in 1991. The district now permits agricultural and related uses only and is zoned for 1 dwelling unit per 20 acres. District regulations also limit building setbacks.

***Special Zoning District 15***

In 1985, the County adopted Special Zoning District 15, a small 60 acre area that includes the SE/SW Section 2 and E/NE/SW/ Section 2, Township 2 North, Range 27 East. The district is generally located .5 miles east of Shepherd along the Shepherd-Acton Road. Only single family dwelling on a minimum of 5 acres are permitted in this district and mobile home parks, feedlot operations, junkyards and commercial uses are not permitted. Home occupations are restricted.

***Special Zoning District 16***

Special Zoning District 16 occupies 23.25 square miles in Township 3 South, Range 25 East. The district is zoned exclusively for agricultural purposes and allows one single family dwelling per 40 acres. The district was adopted in 1986. The district extends from the south township line of Township 2 South, Range 25 East south to the south section line of Township 3 South, Range 25 East. It is bordered on the north by Special Zoning District 14. In addition to land use, the regulations also limit building setbacks.

***Pleasant Hollow Trail Area, Special Zoning District 17***

Special Zoning District 17 is located in Sections 13, 14, and 15, Township 3 North, Range 27 E and encompasses 960 acres. The District is divided into 3 zoning districts: Agricultural-Residential, Residential-10 and Residential-5. The Agricultural- Residential zone allows for 1 dwelling unit per 20 acres. Agricultural uses, childcare facilities, domestic greenhouses, home occupations, and private stables are also permitted. The remaining zoning districts permit the same uses but restrict the density to 1 dwelling unit per 10 acres for the Residential-10 zone, and 1 dwelling unit per 5 acres for the Residential-5 zone.

***Special Zoning District 18***

Special Zoning District 18 is situated south of the Yellowstone River between Spring Creek Road and Montana Highway 212 in Sections 22 and 23, Township 2 South, Range 24 East. The district is composed of five zoning districts: Agricultural, Suburban, Residential, Recreational and Commercial. Only two properties are zoned Commercial and are located adjacent to Thiel Road. The Commercial zone is intended for retail and

service-oriented businesses. A single tract is zoned for recreational uses which allow single family homes and manufactured homes, as well as bed & breakfasts, campgrounds, motels, and restaurants. The Residential zone permits single family dwellings at one dwelling unit per acre. The Suburban zone is zoned for one dwelling per two acres. Most of Special Zoning District 18 is zoned for agricultural uses that permit one dwelling unit per 5 acres as well as agricultural uses, child care facilities, manufactured homes, and home occupations.

***Broadview:***

The incorporated Town of Broadview, situated approximately 25 miles northwest of Billings along Montana Highway 3, is zoned. The Townsite measures roughly 130 acres and is divided into two zoning districts residential and commercial. The commercial district comprises roughly 1/3 of the Townsite and the remainder is zoned residential. The residential zone permits single-family and multifamily dwellings (not to exceed three stories), churches, parks, public utility stations, schools and individual mobile homes. The commercial zone is intended to accommodate service and retail facilities only. The City-County Planning Department administers the Broadview zoning regulations. A Board of Adjustment acts on variance requests, and the Town Council decides special use and zone change applications. Broadview has a population of 150 and 64 households according to Census 2000 data.

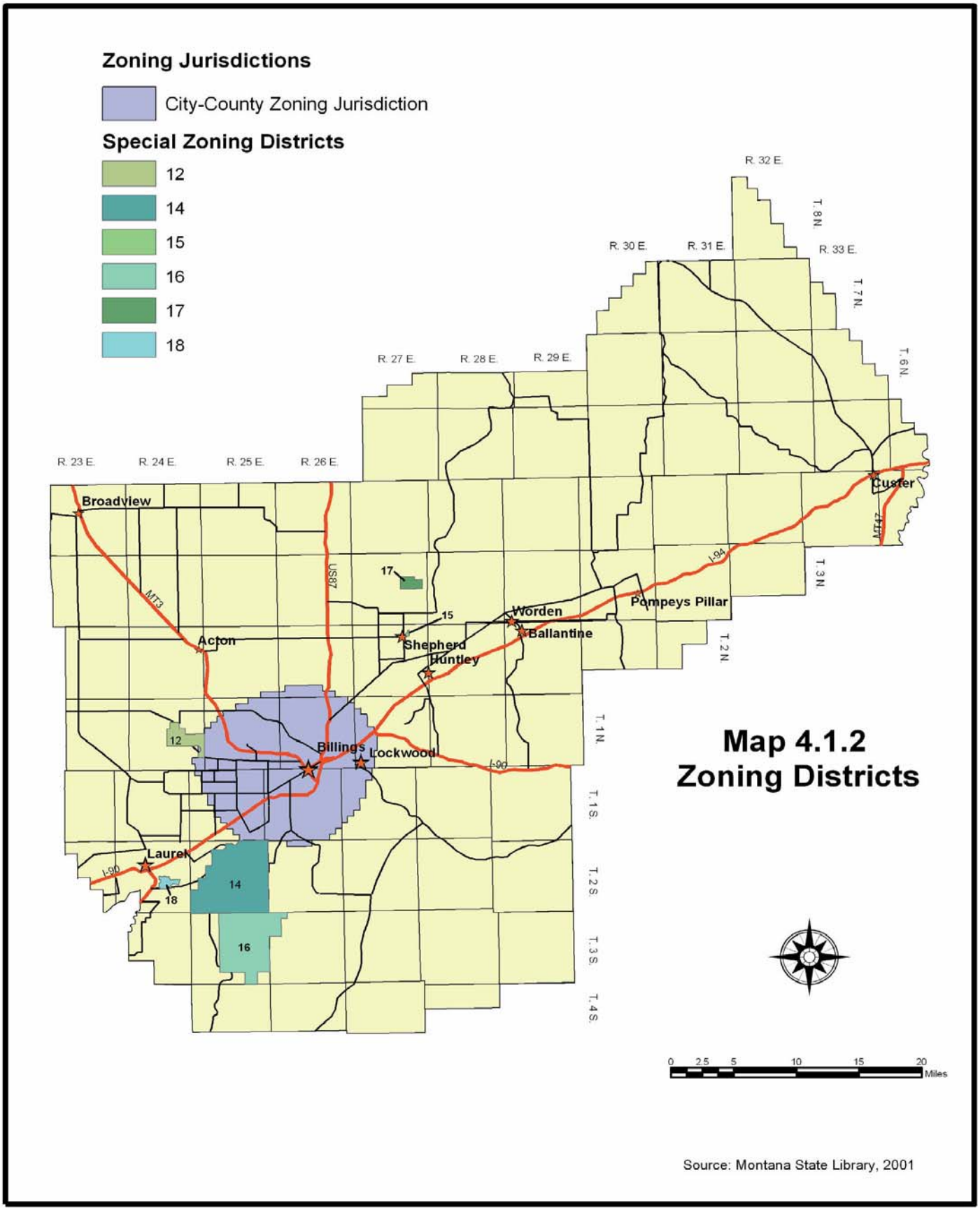
Zoning Jurisdictions
City-County Zoning Jurisdiction
Special Zoning Districts
12
14
15
16
17
18
R. 32 E.
R. 30 E.
R. 31 E.
R. 33 E.
T. 8 N.
T. 7 N.
T. 6 N.
R. 27 E.
R. 28 E.
R. 29 E.
R. 23 E.
R. 24 E.
R. 25 E.
R. 26 E.
Broadview
Custer
MT3
US87
I-94
T. 3 N.
Pompeys Pillar
Worden
Ballantine
Shepherd
Huntley
Acton
T. 2 N.
T. 1 N.
Billings
Lockwood
I-90
T. 1 S.
Laurel
T. 2 S.
T. 3 S.
T. 4 S.
Map 4.1.2
Zoning Districts
0 2.5 5 10 15 20
Miles
Source: Montana State Library, 2001